STATE	PROJECT NUMBER	SHEET NO.	TOTAL SHEETS
GA.	BRZLB-0057-00(017)	27	107

DIMENSION "D" IS MEASURED FROM TOP OF SLAB TO TOP OF BEAMS AT CENTERLINE BEARING. VARY "D" BETWEEN BEARINGS TO COMPENSATE FOR DEAD LOAD DEFLECTION AND VERTICAL CURVE. MAINTAIN A CONSTANT SLAB THICKNESS OF 7¾"
"D" = 9½"

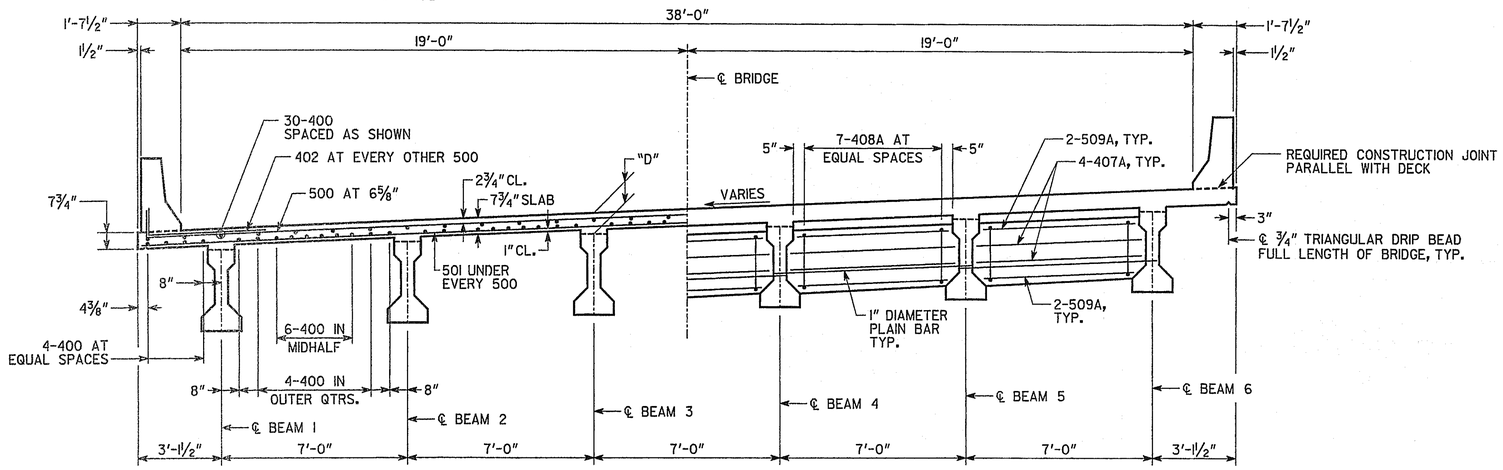

HALF SECTION THRU SLAB
(LOOKING AHEAD)

HALF SECTION THRU DIAPHRAGM
(LOOKING AHEAD)

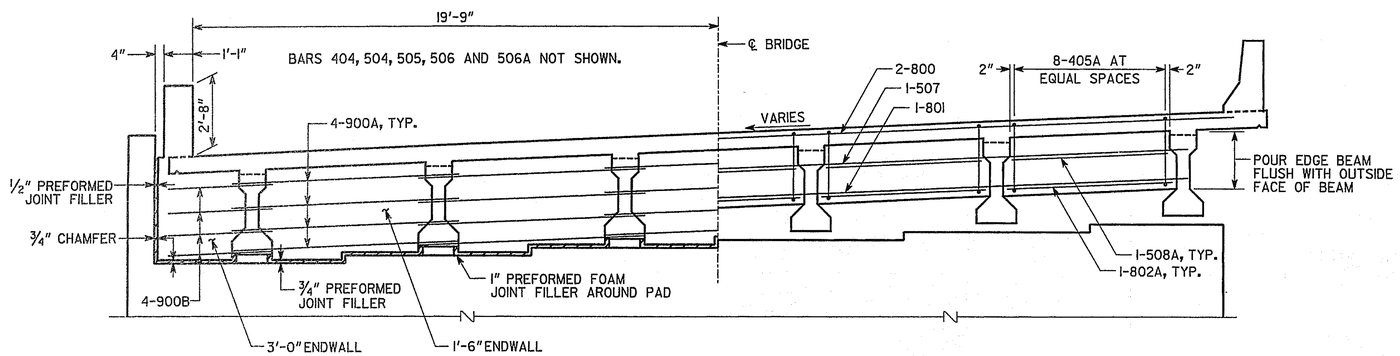

HALF SECTION THRU ENDWALL
(LOOKING AHEAD)

HALF SECTION THRU EDGE BEAM
(LOOKING AHEAD)

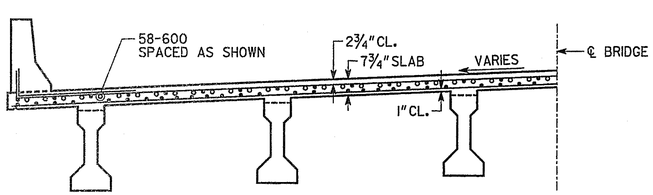

HALF SECTION THRU SLAB AT INTERMEDIATE BENT
(LOOKING AHEAD)

* TAPERS TO 0" AT END POST

** AT CONTRACTOR'S OPTION, 10" RADIUS MAY BE REPLACED BY STRAIGHT INTERSECTING SLOPES.

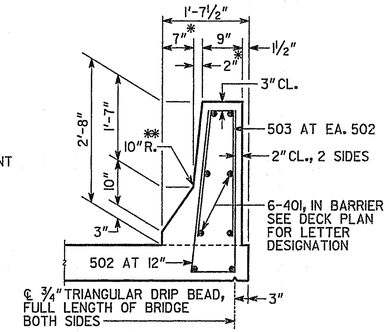

BARRIER DETAIL
NO SCALE

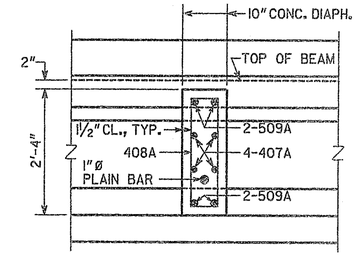

SLAB REINFORCEMENT NOT SHOWN.

SECTION THRU DIAPHRAGM
NO SCALE

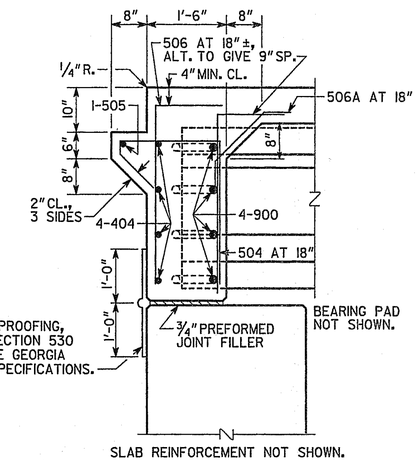

SLAB REINFORCEMENT NOT SHOWN.

SECTION AT ENDWALL
NO SCALE

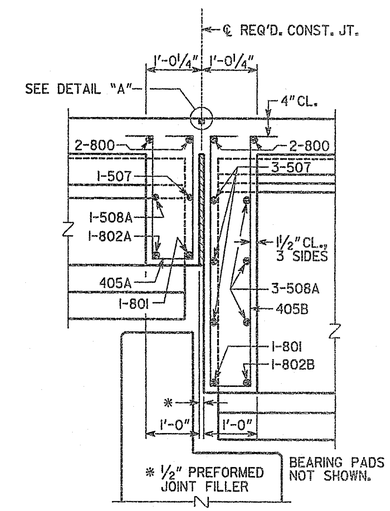

SLAB REINFORCEMENT NOT SHOWN.

SECTION THRU EDGE BEAM
NO SCALE

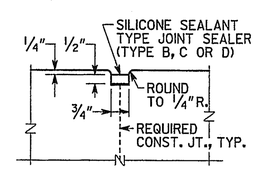

DETAIL "A"
NO SCALE

NOTES:

1. MAINTAIN 2" CLEARANCE TO ALL REINFORCEMENT UNLESS OTHERWISE NOTED.
2. PLACE BARS 405A AND 504 PARALLEL TO BEAMS.

BRIDGE NO. 1

PARSONS
5390 TRIANGLE PARKWAY, SUITE 100
NORCROSS, GA 30092

GEORGIA
DEPARTMENT OF TRANSPORTATION
PRECONSTRUCTION DIVISION-OFFICE OF BRIDGE DESIGN

DECK SECTION - SPAN 1
CR 107 (HOWELL BRIDGE ROAD)
OVER SHARP MOUNTAIN CREEK
CHEROKEE COUNTY BRZLB-0057-00(017)

SCALE: ⅜" = 1'-0" DECEMBER 2008

BY	REVISIONS	DATE

BRIDGE SHEET 4 OF 18

DESIGNED JCO	CHECKED TED	REVIEWED WEI/WMD
DRAWN EPR	DESIGN GROUP	APPROVED PVL