STATE	PROJECT NUMBER	SHEET NO.	TOTAL SHEETS
GA.	EDF-017-3(39)	134	194

DETAIL OF CATCH BASIN MODIFIED FOR DOUBLE GRATES

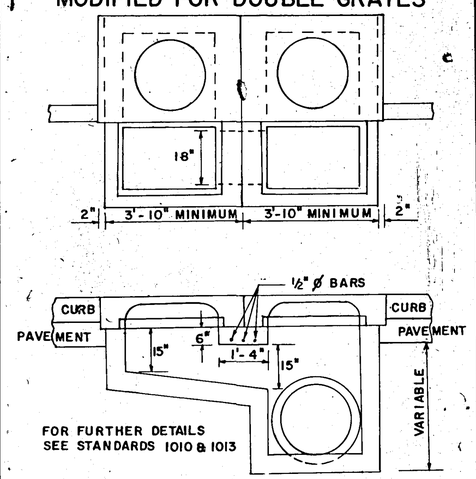

DETAIL OF DROP INLET MODIFIED FOR DOUBLE GRATES

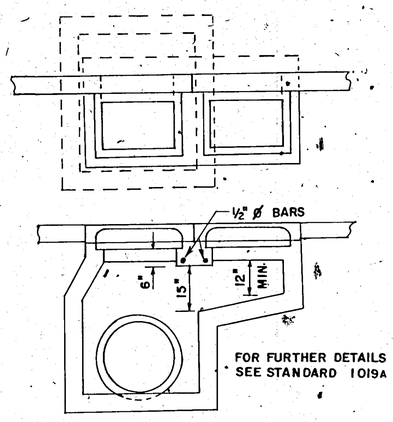

DETAIL OF CONCRETE SPRING BOX

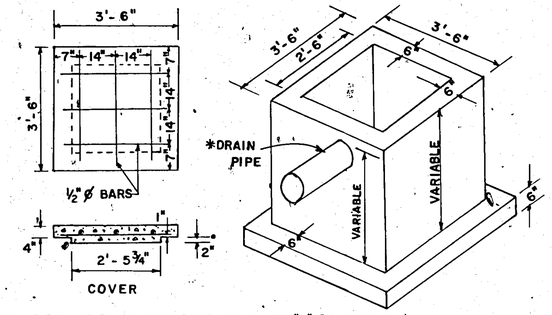

NOTE: SPRING BOX TO BE CONSTRUCTED OF CLASS "A" CONCRETE.

* DRAIN PIPE SHALL BE 6" PERFORATED UNDERDRAIN PIPE EXCEPT WHERE OTHERWISE SPECIFIED. (2" GALV. PIPE USED ONLY IN SPECIAL CASES.) PAYMENT FOR SPRING BOX INCLUDES 1'-6" MIN. LENGTH OF DRAIN PIPE. ANY ADDITIONAL PIPE REQUIRED SHALL BE PAID FOR SEPARATELY.

DETAIL OF CONCRETE STEPS

NOTE: BASIS OF PAYMENT SHALL BE CLASS "B" CONC. INCL. REINF. STEEL UNLESS OTHERWISE SPECIFIED.

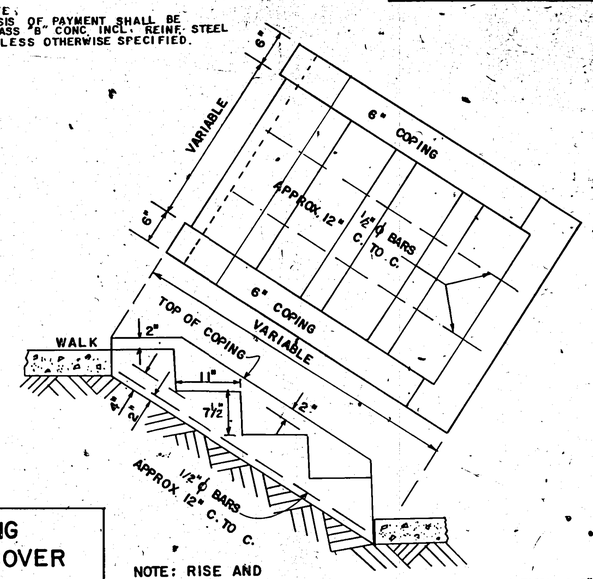

NOTE: RISE AND TREAD ARE TO BE ADJUSTED TO FIT SLOPE. RISE NOT TO EXCEED 8".

DETAILS OF CATCH BASIN OR DROP INLET CONNECTION TO CONCRETE BOX CULVERT

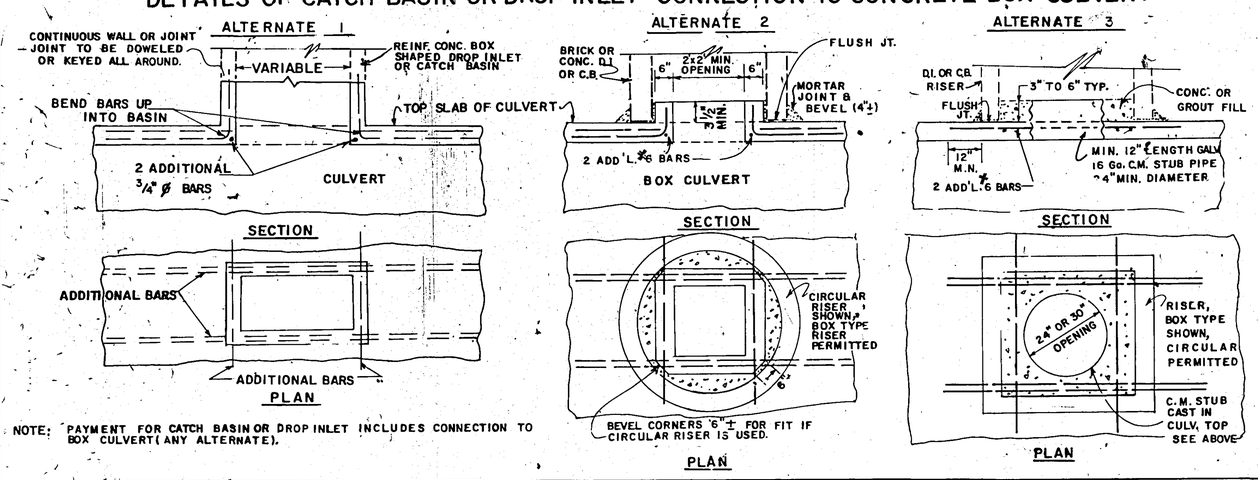

NOTE: PAYMENT FOR CATCH BASIN OR DROP INLET INCLUDES CONNECTION TO BOX CULVERT (ANY ALTERNATE).

DETAILS FOR CAPPING EXISTING DROP INLET WITH CONCRETE COVER

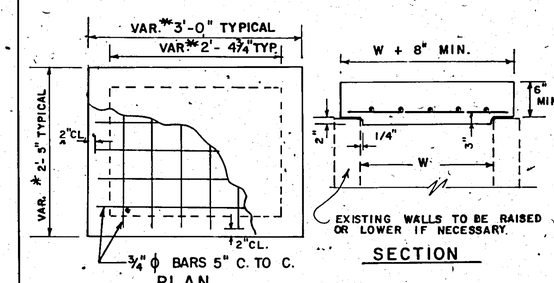

NOTE: CONCRETE COVER SHOWN IS FOR USE IN CAPPING MINOR STRUCTURE WHERE CONVERSION FROM DROP INLET TO JUNCTION BOX IS DESIRED, SEE STD. 1011A REINFORCED CONCRETE COVER FOR CONVERSION TO MANHOLE.

* DIMENSIONS INDICATED ABOVE ARE TYPICAL FOR APPLICATION WITH STD. 1019A. DROP INLET AND WILL VARY ACCORDING TO STRUCTURE, HOWEVER NO INSIDE DIMENSION SHOULD EXCEED 4'-0" WITHOUT STRUCTURAL REVIEW. INLET DIMENSIONS SHOULD BE DETERMINED PRIOR TO CASTING CONC COVER.

NOTE: IF STRUCTURE IS TO BE UNDER TRAFFIC AND DOES NOT HAVE ONE FT. MIN. CLEARANCE TO SUBBASE, THE SLAB THICKNESS SHALL BE INCREASED BY 4" AND THE REBARS SIZE INCREASED FROM 3/4" Ø TO 1" Ø.

DETAIL FOR RAISING HEADWALL.

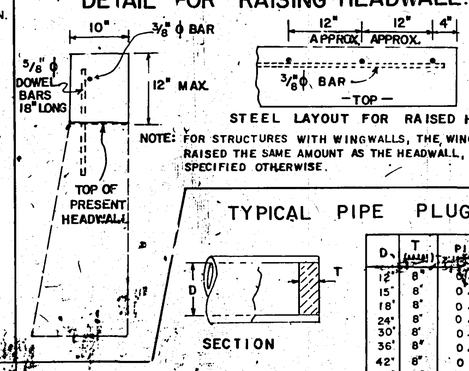

NOTE: FOR STRUCTURES WITH WINGWALLS, THE WINGS SHALL BE RAISED THE SAME AMOUNT AS THE HEADWALL, UNLESS SPECIFIED OTHERWISE.

TYPICAL PIPE PLUG

D.	T (MIN.)	PIPE PLUG (CU. YDS.)
12"	8"	0.0194
15"	8"	0.0383
18"	8"	0.0466
24"	8"	0.0776
30"	8"	0.1242
36"	8"	0.1[illegible]
42"	8"	0.23[illegible]
48"	8"	0.3103
54"	12"	0.5890
60"	12"	0.7272
66"	12"	0.8799
72"	12"	1.0472

NOTE: PLAN PAY QUANTITIES ARE TO REFLECT PIPE PLUGS AS CU. YDS. OF CL. A OR CL. B CONCRETE. ON CONSTRUCTION PLUGS MAY BE BUILT WITH BRICK MASONRY, MORTAR RUBBLE MASONRY, CL. A CONC., OR CL. B CONC. WITH NO ADJUSTMENT IN PAYMENT MADE FOR ALTERNATES.

DETAILS OF RETAINING WALL TYPICAL SECTIONS

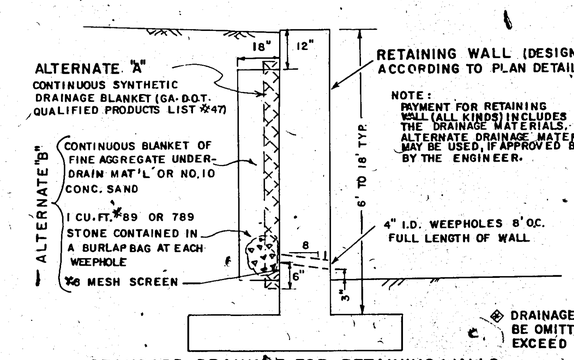

◈ DRAINAGE ALTERNATES MAY BE OMITTED IF "H" DOES NOT EXCEED 6'-0".

STANDARD DRAINAGE FOR RETAINING WALLS
(FOR HEIGHTS FROM 6 FT TO 18 FT. - SPECIAL DESIGN DRAINAGE REQUIRED FOR RETAINING WALLS OVER 18 FT. IN HEIGHT.)

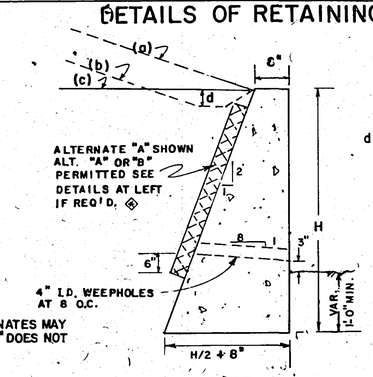

TYPICAL SECTION FOR GRAVITY TYPE WALL
MATERIALS: CLASS "B" CONC. OR MORTAR RUBBLE MASONRY.

(a) — SLOPED BACKFILL, NO DITCH

(b) — SLOPED BACKFILL WITH DITCH

(c) — FLAT BACKFILL

d = DITCH DEPTH, 6"-12" TYPICAL SEE PLANS FOR DESIGN

MAXIMUM "H" *		
BACK FILL	PLAIN WALL	W. BARRIER FACE
FLAT	10'-0" **	10'-0"
SLOPE TO 4:1	6'-3"	7'-0"
SLOPE TO 2:1	4'-6"	4'-9"

* GREATER "H" PERMITTED IF APPROVED BY BRIDGE DESIGN.

** MAXIMUM "H" OF 7'-3" HERE IF TRAFFIC IS ON BACKFILL.

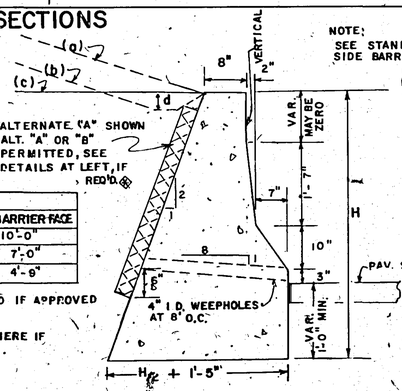

NOTE: SEE STANDARD 4948 WHERE CONCRETE SIDE BARRIERS ARE DESIRED.

GRAVITY WALL WITH BARRIER FACE SHALL BE CONSTRUCTED OF CLASS "A" CONCRETE.

TYPICAL SECTION FOR GRAVITY WALL WITH BARRIER FACE

REVISIONS	DATE	BY
ADD PIPE PLUG DETAILS	2-15-83	R.M.U.
REV. WALL "H" TABLE ADDED	4-30-84	R.M.U.

DEPARTMENT OF TRANSPORTATION
STATE OF GEORGIA

STANDARD

DETAILS OF: CATCH BASIN MODIFIED FOR DOUBLE GRATE, DROP INLET MODIFIED FOR DOUBLE GRATE, CONCRETE SPRING BOX, CONCRETE STEPS, CATCH BASIN OR DROP INLET CONNECTION TO CONCRETE BOX CULVERT, CAPPING EXISTING DROP INLET, RAISING HEADWALL, RETAINING WALL TYPICAL SECTIONS, TYPICAL PIPE PLUG.

NO SCALE:

REV. & REDR. DECEMBER, 1982

REV. & RMU. REDR. TRA. GME. CHK. RKC.

(SUBMITTED) STATE ROAD & AIRPORT DESIGN ENGR.

(APPROVED) STATE HIGHWAY ENGINEER

NUMBER 9031L

FORM EF6