STATE	PROJECT NUMBER	SHEET No.	TOTAL SHEETS
GA.	EDF-017-3(39)	117	194

DIMENSIONS - WINGS AND PARAPETS

SAME FOR ALL DEPTHS OF FILL

75° SKEW — WING A (E BARS ½"φ AT 12" C. TO C.; F BARS ½"φ AT 12" C. TO C.) and PARAPET K - ½"φ

CLEAR SPAN	CLEAR HEIGHT		E	E	E	E	E	E	E	F	F	F	F	F	K SINGLE	K DOUBLE	K TRIPLE
4'	5'	NUMBER	4	4	4	4	4	4	2	8	2	2	2	2	4		
		LENGTH	8-3"	7-7"	7-0"	6-4"	5-8"	5-0"	4-9"	11-10	10-9	7-7"	4-6"	2-3"	6-9"		
3'	2'	NUMBER	4	4	4	2				6	2	2			4		
		LENGTH	5·3	4·7	3·10	3·6				6·4	4·3	2·3			5·9		
	2'6"	NUMBER	4	4	4	4				6	2	2			4	4	4
		LENGTH	5·9	5·2	4·6	3·10				7·7	6·3	3·1			5·9	9·5	13·1
	3'	NUMBER	4	4	4	4	2			6	2	2	2		4	4	4
		LENGTH	6·3	5·8	5·1	4·5	4·1			8·7	7·11	4·9	2·3		5·9	9·5	13·1
4'	2'6"	NUMBER	4	4	4	4				6	2	2			4	4	4
		LENGTH	5·9	5·2	4·6	3·10				7·7	6·3	3·1			6·9	11·5	16·1
	3'	NUMBER	4	4	4	4	2			6	2	2	2		4	4	4
		LENGTH	6·3	5·8	5·1	4·5	4·1			8·7	7·11	4·9	2·3		6·9	11·5	16·1
	4'	NUMBER	4	4	4	4	4	2		8	2	2	2		4	4	4
		LENGTH	7·3	6·8	6·0	5·4	4·8	4·4		10·1	7·8	4·7	2·3		6·9	11·7	16·5
5'	2'6"	NUMBER	4	4	4	4				6	2	2			4	4	4
		LENGTH	5·9	5·2	4·6	3·10				7·7	6·3	3·1			7·9	13·5	19·1
	3'	NUMBER	4	4	4	4	2			6	2	2	2		4	4	4
		LENGTH	6·3	5·8	5·1	4·5	4·1			8·7	7·11	4·9	2·3		7·9	13·5	19·1
	4'	NUMBER	4	4	4	4	4	2		8	2	2	2		4	4	4
		LENGTH	7·3	6·8	6·0	5·4	4·8	4·4		10·1	7·8	4·7	2·3		7·9	13·7	19·5
	5'	NUMBER	4	4	4	4	4	4	2	8	2	2	2	2	4	4	4
		LENGTH	8·3	7·7	7·0	6·4	5·8	5·0	4·9	11·10	10·9	7·7	4·6	2·3	7·9	13·7	19·5
6'	3'	NUMBER	4	4	4	4	2			6	2	2	2		4	4	4
		LENGTH	6·3	5·8	5·1	4·5	4·1			8·7	7·11	4·9	2·3		8·9	15·7	22·5
	4'	NUMBER	4	4	4	4	4	2		8	2	2	2		4	4	4
		LENGTH	7·3	6·8	6·0	5·4	4·8	4·4		10·1	7·8	4·7	2·3		8·9	15·7	22·7
	5'	NUMBER	4	4	4	4	4	4	2	8	2	2	2	2	4	4	4
		LENGTH	8·3	7·7	7·0	6·4	5·8	5·0	4·9	11·10	10·9	7·7	4·6	2·3	8·9	15·9	22·9
	6'	NUMBER	4	4	4	4	4	4	4	10	2	2	2	2	4	4	4
		LENGTH	9·4	8·8	8·0	7·4	6·8	6·0	5·4	13·7	10·8	7·9	4·10	2·3	8·9	15·9	22·9

60° SKEW — WING B (E BARS ½"φ AT 12" C. TO C.; F BARS ½"φ AT 12" C. TO C.)

CLEAR SPAN	CLEAR HEIGHT		E	E	E	E	E	E	E	E	E	F	F	F	F	F	F	F
4'	5'	NUMBER	4	4	4	4	4	4	4	2		6	2	2	2	2	2	
		LENGTH	8-3"	7-8"	6-11"	6-3"	5-7"	4-11"	4-3"	3-11"		14-7"	13-4	10-4"	7-5"	4-6"	2-3"	
3'	2'	NUMBER	4	4	4	4						4	2	2	2			
		LENGTH	5·3	4·6	3·9	3·0						7·7	6·8	4·1	2·3			
	2'6"	NUMBER	4	4	4	4	4					4	2	2	2			
		LENGTH	5·9	5·1	4·4	3·8	2·11					9·1	8·6	5·7	2·10			
	3'	NUMBER	4	4	4	4	4	2				6	2	2	2			
		LENGTH	6·3	5·7	4·11	4·3	3·6	3·2				10·1	7·3	4·4	2·3			
4'	2'6"	NUMBER	4	4	4	4	4					4	2	2	2			
		LENGTH	5·9	5·1	4·4	3·8	2·11					9·1	8·6	5·7	2·10			
	3'	NUMBER	4	4	4	4	4	2				6	2	2	2			
		LENGTH	6·3	5·7	4·11	4·3	3·6	3·2				10·1	7·3	4·4	2·3			
	4'	NUMBER	4	4	4	4	4	4	2			6	2	2	2	2		
		LENGTH	7·3	6·7	5·11	5·2	4·6	3·10	3·5			12·1	10·0	7·2	4·3	2·3		
5'	2'6"	NUMBER	4	4	4	4	4					4	2	2	2			
		LENGTH	5·9	5·1	4·4	3·8	2·11					9·1	8·6	5·7	2·10			
	3'	NUMBER	4	4	4	4	4	2				6	2	2	2			
		LENGTH	6·3	5·2	4·11	4·3	3·6	3·2				10·1	7·3	4·4	2·3			
	4'	NUMBER	4	4	4	4	4	4	2			6	2	2	2	2		
		LENGTH	7·3	6·7	5·11	5·2	4·6	3·10	3·5			12·1	10·0	7·2	4·3	2·3		
	5'	NUMBER	4	4	4	4	4	4	4	2		6	2	2	2	2	2	
		LENGTH	8·3	7·6	6·11	6·3	5·7	4·11	4·3	3·11		14·7	13·4	10·4	7·5	4·6	2·3	
6'	3'	NUMBER	4	4	4	4	4	2				6	2	2	2			
		LENGTH	6·3	5·7	4·11	4·3	3·6	3·2				10·1	7·3	4·4	2·3			
	4'	NUMBER	4	4	4	4	4	4	2			6	2	2	2	2		
		LENGTH	7·3	6·7	5·11	5·2	4·6	3·10	3·5			12·1	10·0	7·2	4·3	2·3		
	5'	NUMBER	4	4	4	4	4	4	4	2		6	2	2	2	2	2	
		LENGTH	8·3	7·8	6·11	6·3	5·7	4·11	4·3	3·11		14·7	13·4	10·4	7·5	4·6	2·3	
	6'	NUMBER	4	4	4	4	4	4	4	4	2	6	2	2	2	2	2	2
		LENGTH	9·3	8·8	8·0	7·3	6·7	5·11	5·2	4·6	4·2	16·7	16·0	13·2	10·3	7·5	4·6	2·3

60° SKEW — PARAPET (K - ½"φ; L - ⅝"φ)

CLEAR SPAN	CLEAR HEIGHT		K SINGLE	K DOUBLE	K TRIPLE	L SINGLE	L DOUBLE	L TRIPLE
4'	5'	NUMBER	4			6		
		LENGTH	7-6"			6-2"		
3'	2'	NUMBER	4			4		
		LENGTH	6·0			4·8		
	2'6"	NUMBER	4	4	4	4	4	4
		LENGTH	6·0	10·0	14·2	4·8	8·8	12·9
	3'	NUMBER	4	4	4	4	4	4
		LENGTH	6·0	10·0	14·2	4·8	8·8	12·9
4'	2'6"	NUMBER	4	4	4	6	6	6
		LENGTH	7·4	12·6	17·8	6·0	11·2	16·4
	3'	NUMBER	4	4	4	6	6	6
		LENGTH	7·4	12·6	17·8	6·0	11·2	16·4
	4'	NUMBER	4	4	4	6	6	6
		LENGTH	7·6	12·10	18·4	6·2	11·7	16·11
5'	2'6"	NUMBER	4	4	4	8	8	8
		LENGTH	8·4	14·8	21·0	7·1	13·5	19·9
	3'	NUMBER	4	4	4	8	8	8
		LENGTH	8·4	14·8	21·0	7·1	13·5	19·9
	4'	NUMBER	4	4	4	8	8	8
		LENGTH	8·6	15·0	21·8	7·4	13·10	20·4
	5'	NUMBER	4	4	4	8	8	8
		LENGTH	8·6	15·0	21·8	7·4	13·10	20·4
6'	3'	NUMBER	4	4	4	10	10	10
		LENGTH	9·7	17·3	24·9	8·2	15·9	23·4
	4'	NUMBER	4	4	4	10	10	10
		LENGTH	9·7	17·4	25·2	8·4	16·0	23·8
	5'	NUMBER	4	4	4	10	10	10
		LENGTH	9·9	17·7	25·5	8·6	16·4	24·1
	6'	NUMBER	4	4	4	10	10	10
		LENGTH	9·9	17·7	25·5	6·6	16·4	24·1

45° SKEW — WING C (E BARS ½"φ AT 12" C. TO C.; F BARS ½"φ AT 12" C. TO C.)

CLEAR SPAN	CLEAR HEIGHT		E	E	E	E	E	E	E	E	E	E	E	F	F	F	F	F	F
4'	5'	NUMBER	4	4	4	4	4	4	4	4	4	4		8	2	2	2	2	
		LENGTH	8-3"	8-0"	7-6"	7-3"	6-7"	6-1"	5-8"	5-2"	4-9"	4-3"		19-4	15-3	10-10	6-8	2-4"	
3'	2'	NUMBER	4	4	4	4	4	4						4	2	2	2		
		LENGTH	5·3	5·0	4·6	4·0	3·5	3·0						10·10	10·4	6·4	2·4		
	2'6"	NUMBER	4	4	4	4	4	4	2					6	2	2			
		LENGTH	5·9	5·6	5·0	4·7	4·1	3·7	3·5					12·4	8·9	4·5			
	3'	NUMBER	4	4	4	4	4	4	4	2				6	2	2	2		
		LENGTH	6·3	6·0	5·6	5·1	4·7	4·2	3·8	3·6				13·10	11·1	6·9	2·5		
4'	2'6"	NUMBER	4	4	4	4	4	4	2					6	2	2			
		LENGTH	5·9	5·6	5·0	4·7	4·1	3·7	3·5					12·4	8·9	4·5			
	3'	NUMBER	4	4	4	4	4	4	4	2				6	2	2	2		
		LENGTH	6·3	6·0	5·6	5·1	4·7	4·2	3·8	3·6				13·10	11·1	6·9	2·5		
	4'	NUMBER	4	4	4	4	4	4	4	4	2			6	2	2	2	2	
		LENGTH	7·3	7·0	6·6	6·1	5·7	5·1	4·8	4·2	3·11			16·4	15·1	10·10	6·7	2·5	
5'	2'6"	NUMBER	4	4	4	4	4	4	2					6	2	2			
		LENGTH	5·9	5·6	5·0	4·7	4·1	3·7	3·5					12·4	8·9	4·5			
	3'	NUMBER	4	4	4	4	4	4	4	2				6	2	2	2		
		LENGTH	6·3	6·0	5·6	5·1	4·7	4·2	3·8	3·6				13·10	11·1	6·9	2·5		
	4'	NUMBER	4	4	4	4	4	4	4	4	2			6	2	2	2	2	
		LENGTH	7·3	7·0	6·6	6·1	5·7	5·1	4·8	4·2	3·11			16·4	15·1	10·10	6·7	2·5	
	5'	NUMBER	4	4	4	4	4	4	4	4	4	4		8	2	2	2	2	
		LENGTH	8·3	8·0	7·6	7·3	6·7	6·1	5·8	5·2	4·9	4·3		19·4	15·3	10·10	6·8	2·4	
6'	3'	NUMBER	4	4	4	4	4	4	4	2				6	2	2	2		
		LENGTH	6·3	6·0	5·6	5·1	4·7	4·2	3·8	3·6				13·10	11·1	6·9	2·5		
	4'	NUMBER	4	4	4	4	4	4	4	4	2			6	2	2	2	2	
		LENGTH	7·3	7·0	6·6	6·1	5·7	5·1	4·8	4·2	3·11			16·4	15·1	10·10	6·7	2·5	
	5'	NUMBER	4	4	4	4	4	4	4	4	4	4		8	2	2	2	2	
		LENGTH	8·3	8·0	7·6	7·3	6·7	6·1	5·8	5·2	4·9	4·3		19·4	15·3	10·10	6·8	2·4	
	6'	NUMBER	8	4	4	4	4	4	4	4	4	4	4	8	2	2	2	2	2
		LENGTH	9·4	9·1	8·7	8·2	7·7	7·1	6·8	6·2	5·8	5·2	4·8	21·10	19·3	15·0	10·11	6·4	2·6

45° SKEW — PARAPET (K - ½"φ; L - ⅝"φ)

CLEAR SPAN	CLEAR HEIGHT		K SINGLE	K DOUBLE	K TRIPLE	L SINGLE	L DOUBLE	L TRIPLE
4'	5'	NUMBER	4			8		
		LENGTH	9'-10"			7-6"		
3'	2'	NUMBER	4			6		
		LENGTH	8·2			5·10		
	2'6"	NUMBER	4	4	4	6	6	6
		LENGTH	8·2	13·2	18·0	5·10	10·9	15·9
	3'	NUMBER	4	4	4	6	6	6
		LENGTH	8·2	13·2	18·0	5·10	10·9	15·9
4'	2'6"	NUMBER	4	4	4	8	8	8
		LENGTH	9·7	15·11	22·3	7·2	13·6	19·10
	3'	NUMBER	4	4	4	8	8	8
		LENGTH	9·7	15·11	22·3	7·2	13·6	19·10
	4'	NUMBER	4	4	4	8	8	8
		LENGTH	9·10	16·2	23·0	7·6	14·1	21·8
5'	2'6"	NUMBER	4	4	4	10	10	10
		LENGTH	10·11	18·9	26·5	8·8	16·5	24·2
	3'	NUMBER	4	4	4	10	10	10
		LENGTH	10·11	18·9	26·5	8·8	16·5	24·2
	4'	NUMBER	4	4	4	10	10	10
		LENGTH	11·2	19·2	27·2	8·10	16·10	24·10
	5'	NUMBER	4	4	4	10	10	10
		LENGTH	11·2	19·2	27·2	8·10	16·10	24·10
6'	3'	NUMBER	4	4	4	12	12	12
		LENGTH	12·7	21·11	31·3	10·0	19·4	28·7
	4'	NUMBER	4	4	4	12	12	12
		LENGTH	12·8	12·2	31·4	10·2	19·7	29·0
	5'	NUMBER	4	4	4	12	12	12
		LENGTH	12·10	22·4	31·10	10·4	19·10	29·5
	6'	NUMBER	4	4	4	12	12	12
		LENGTH	12·10	22·4	31·10	10·4	19·10	29·5

ALL ANGLES OF SKEW — WING D (E BARS ½"φ AT 12" C. TO C.; F BARS ½"φ AT 12" C. TO C.)

CLEAR SPAN	CLEAR HEIGHT		E	E	E	E	E	E	F	F	F	F	F
4'	5'	NUMBER	4	4	4	4	4		8	2	2	2	2
		LENGTH	8-2"	7-4"	6-7"	5-9"	5-0"		9-1"	5-8"	6-2"	3-8"	2-3"
3'	2'	NUMBER	4	4	2				6	2	2		
		LENGTH	5·1	4·3	3·10				4·8	3·3	2·3		
	2'6"	NUMBER	4	4	4				6	2	2		
		LENGTH	5·7	4·10	4·0				5·8	4·10	2·3		
	3'	NUMBER	4	4	4	2			6	2	2	2	
		LENGTH	6·1	5·4	4·7	4·2			6·5	6·2	3·7	2·3	
4'	2'6"	NUMBER	4	4	4				6	2	2		
		LENGTH	5·7	4·10	4·0				5·8	4·10	2·3		
	3'	NUMBER	4	4	4	2			6	2	2	2	
		LENGTH	6·1	5·4	4·7	4·2			6·5	6·2	3·7	2·3	
	4'	NUMBER	4	4	4	4			8	2	2	2	
		LENGTH	7·1	6·4	5·6	4·9			7·8	6·0	3·6	2·3	
5'	2'6"	NUMBER	4	4	4				6	2	2		
		LENGTH	5·7	4·10	4·0				5·8	4·10	2·3		
	3'	NUMBER	4	4	4	2			6	2	2	2	
		LENGTH	6·1	5·4	4·7	4·2			6·5	6·2	3·7	2·3	
	4'	NUMBER	4	4	4	4			8	2	2	2	
		LENGTH	7·1	6·4	5·6	4·9			7·8	6·0	3·6	2·3	
	5'	NUMBER	4	4	4	4	4		8	2	2	2	2
		LENGTH	8·2	7·4	6·7	5·9	5·0		9·1	8·8	6·2	3·8	2·3
6'	3'	NUMBER	4	4	4	2			6	2	2	2	
		LENGTH	6·1	5·4	4·7	4·2			6·5	6·2	3·7	2·3	
	4'	NUMBER	4	4	4	4			8	2	2	2	
		LENGTH	7·1	6·4	5·6	4·9			7·8	6·0	3·6	2·3	
	5'	NUMBER	4	4	4	4	4		8	2	2	2	2
		LENGTH	8·2	7·4	6·7	5·9	5·0		9·1	8·8	6·2	3·8	2·3
	6'	NUMBER	4	4	4	4	4	2	10	2	2	2	2
		LENGTH	9·2	8·5	7·8	6·10	6·1	5·8	10·5	8·11	6·5	3·9	2·3

△ (4' × 5')

DIMENSIONS - WINGS AND PARAPETS

SAME FOR ALL DEPTHS OF FILL

CLEAR SPAN	CLEAR HEIGHT	SINGLES-DOUBLES-TRIPLES 75° SKEW M	75° W2	75° Z	60° SKEW M	60° W2	60° Z	45° SKEW M	45° W2	45° Z	SINGLES 75° R1	75° R2	60° R1	60° R2	45° R1	45° R2	DOUBLES 75° R1	75° R2	60° R1	60° R2	45° R1	45° R2	TRIPLES 75° R1	75° R2	60° R1	60° R2	45° R1	45° R2	FOR ALL SKEWS N	W4	H
4'	5'	10'-9"	2'-6"	1'-5"	13'6"	1'5"	1'-5"	17'6"	1'11"	1'-6"	3'-9"	3'-4"	4'-0"	4'-10"	5'-3"	4'-11"													8'-6"	2'-9"	SAME AS SHOWN ON GEORGIA STANDARDS NO 2321 AND NO. 2325.
3'	2'	5·3	1·1	1·3	6·6	0·6	1·3	9·0	0·9	1·6	3·3	2·10	3·4	3·0	4·6	4·0													4·0	1·3	
	2'6"	6·6	1·5	1·3	8·0	0·8	1·3	10·6	1·0½	1·6	3·3	2·10	3·4	3·0	4·6	4·0	5·1	4·8	5·4	5·0	7·0	6·6	6·11	6·6	7·5	7·1	9·5	8·11	5·0	1·6	
	3'	7·6	1·8	1·3	9·0	0·10½	1·3	12·0	1·3	1·6	3·3	2·10	3·4	3·0	4·6	4·0	5·1	4·8	5·4	5·0	7·0	6·6	6·11	6·6	7·5	7·1	9·5	8·11	5·9	1·9	
4'	2'6"	6·6	1·5	1·3	8·0	0·8	1·3	10·6	1·0½	1·6	3·9	3·4	4·0	3·8	5·3	4·8	6·1	5·8	6·7	6·3	8·5	7·10	8·5	8·0	9·2	8·10	11·7	11·0	5·0	1·6	
	3'	7·6	1·8	1·3	9·0	0·10½	1·3	12·0	1·3	1·6	3·9	3·4	4·0	3·8	5·3	4·8	6·1	5·8	6·7	6·3	8·5	7·10	8·5	8·0	9·2	8·10	11·7	11·0	5·9	1·9	
	4'	9·0	2·1	1·3	11·0	1·2	1·3	14·6	1·7	1·6	3·9	3·4	4·0	3·10	5·3	4·11	6·2	5·9	6·8	6·6	8·7	8·3	8·7	8·2	9·5	9·3	11·10	11·6	7·0	2·3	
5'	2'6"	6·6	1·5	1·3	8·0	0·8	1·3	10·6	1·0½	1·6	4·3	3·10	4·6	4·2	5·11	5·4	7·1	6·8	7·8	7·4	9·10	9·3	9·11	9·6	10·10	10·6	13·8	13·1	5·0	1·6	
	3'	7·6	1·8	1·3	9·0	0·10½	1·3	12·0	1·3	1·6	4·3	3·10	4·6	4·2	5·11	5·4	7·1	6·8	7·8	7·4	9·10	9·3	9·11	9·6	10·10	10·6	13·8	13·1	5·9	1·9	
	4'	9·0	2·1	1·3	11·0	1·2	1·3	14·6	1·7	1·6	4·3	3·10	4·6	4·4	5·11	5·7	7·2	6·9	7·9	7·7	9·11	9·7	10·1	9·8	11·1	10·11	13·11	13·7	7·0	2·3	
	5'	10·9	2·6	1·3	13·6	1·5	1·3	17·6	1·11	1·6	4·3	3·10	4·6	4·4	5·11	5·7	7·2	6·9	7·9	7·7	9·11	9·7	10·1	9·8	11·1	10·11	13·11	13·7	8·6	2·9	
6'	3'	7·6	1·8	1·3	9·0	0·10½	1·3	12·0	1·3	1·6	4·9	4·4	5·1	4·10	6·8	6·3	8·2	7·9	8·11	8·8	11·4	10·11	11·7	11·2	12·8	12·5	16·0	15·7	5·9	1·9	
	4'	9·0	2·1	1·3	11·0	1·2	1·3	14·6	1·7	1·6	4·9	4·4	5·1	4·10	6·8	6·4	8·2	7·9	8·11	8·8	11·5	11·1	11·8	11·3	12·10	12·8	16·1	15·8	7·0	2·3	
	5'	10·9	2·6	1·3	13·6	1·5	1·3	17·6	1·11	1·6	4·9	4·4	5·1	5·0	6·8	6·6	8·3	7·10	9·0	8·11	11·5	11·3	11·9	11·4	12·11	12·10	16·2	16·0	8·6	2·9	
	6'	12·6	2·11	1·3	15·6	1·8	1·3	20·0	2·3	1·6	4·9	4·4	5·1	5·0	6·8	6·6	8·3	7·10	9·0	8·11	11·5	11·3	11·9	11·4	12·11	12·10	16·2	16·0	9·9	3·3	

△ (4' × 5')

TRIPLE 45° AND 60° SKEW BOXES TO HAVE REINFORCING BENT AND HOOKED AS SHOWN FOR DOUBLES.

BEND "A" AND "G" BARS INTO PARAPET OR APRON AND HOOK AS SHOWN FOR SINGLES.

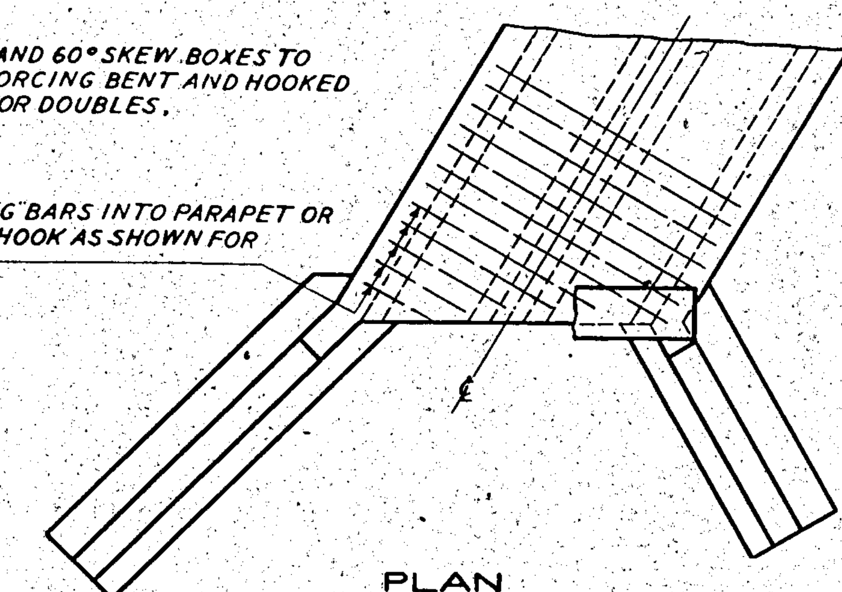

PLAN
DOUBLE 45° OR 60° SKEW BOX

3' CLEAR SPANS SKEW LAST 4 BARS
4' TO 6' CLEAR SPANS SKEW LAST 6 BARS.

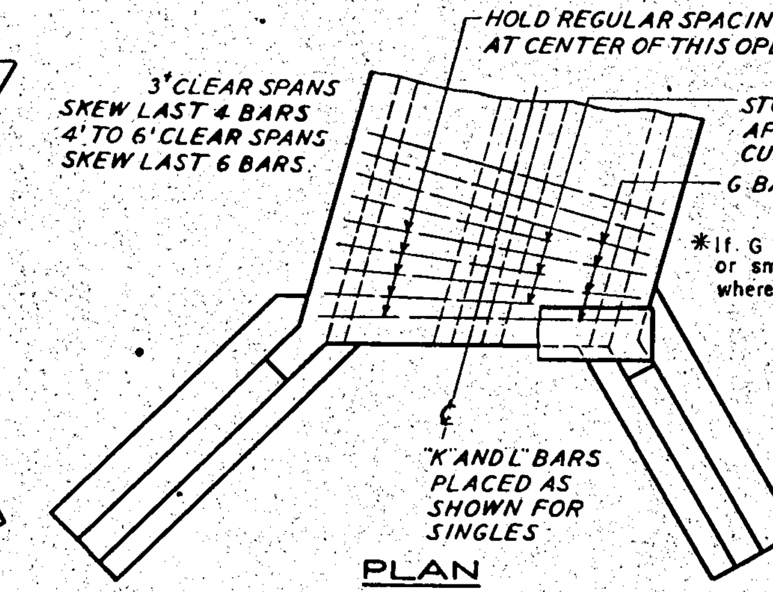

*If G Bars are not required (4'x4' or smaller) substitute A Bars where G Bars are shown.

PLAN
DOUBLE 75° SKEW BOX

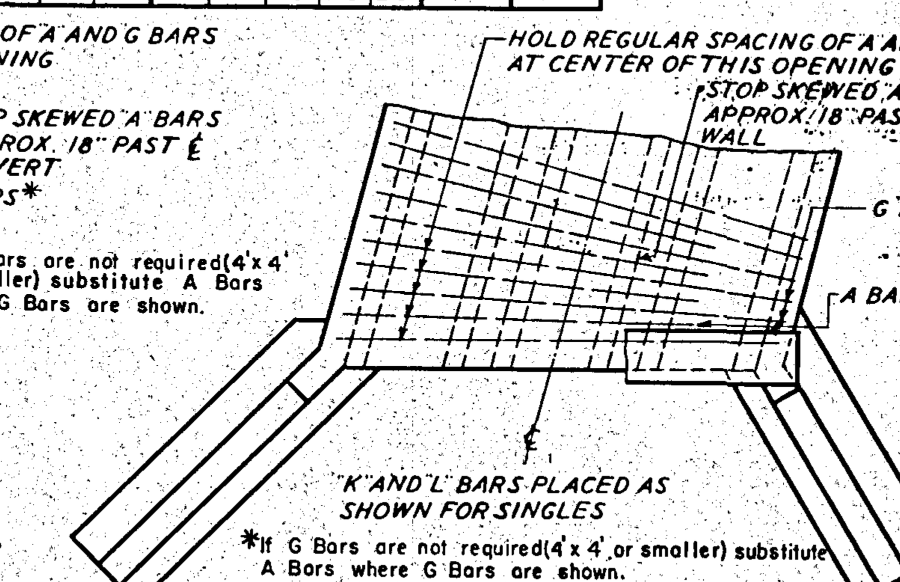

*If G Bars are not required (4'x4' or smaller) substitute A Bars where G Bars are shown.

PLAN
TRIPLE 75° SKEW BOX

NOTE - W1 AND W2 ARE DIMENSIONS FOR WINGS A, B AND C. W3 AND W4 ARE FOR WING D.

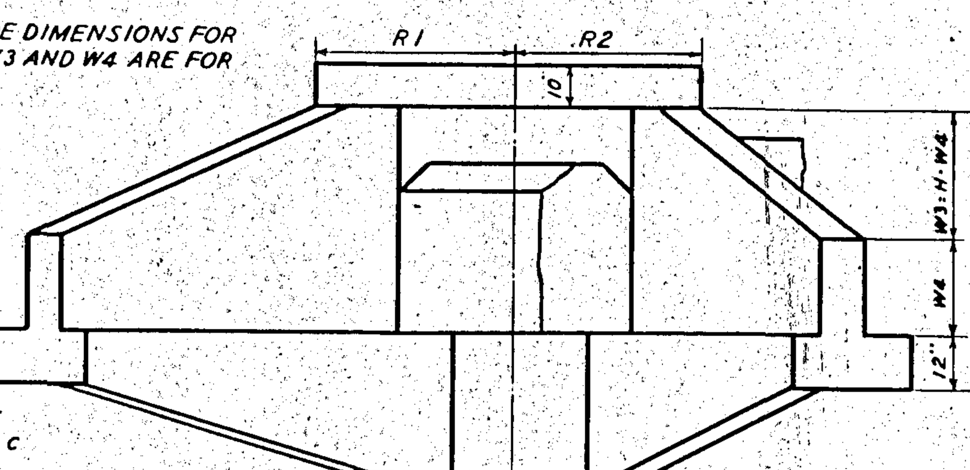

ELEVATION

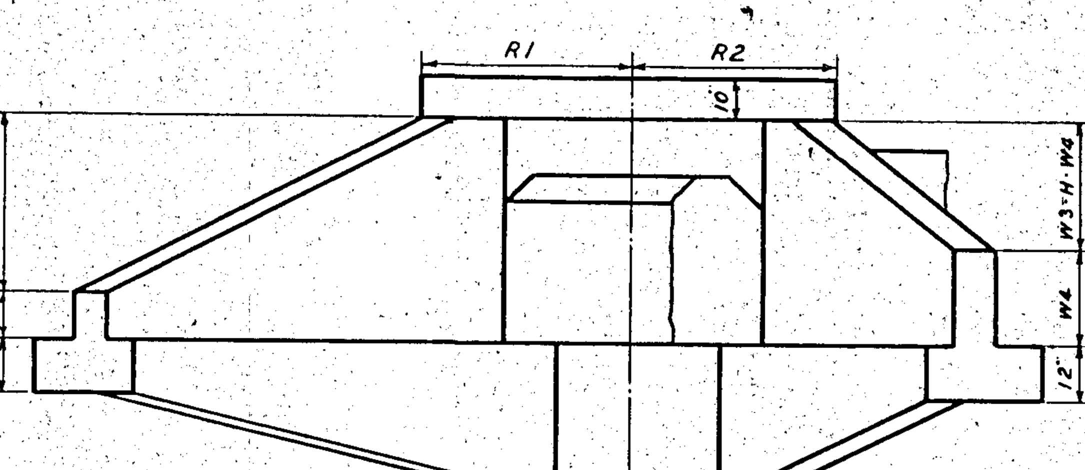

ELEVATION

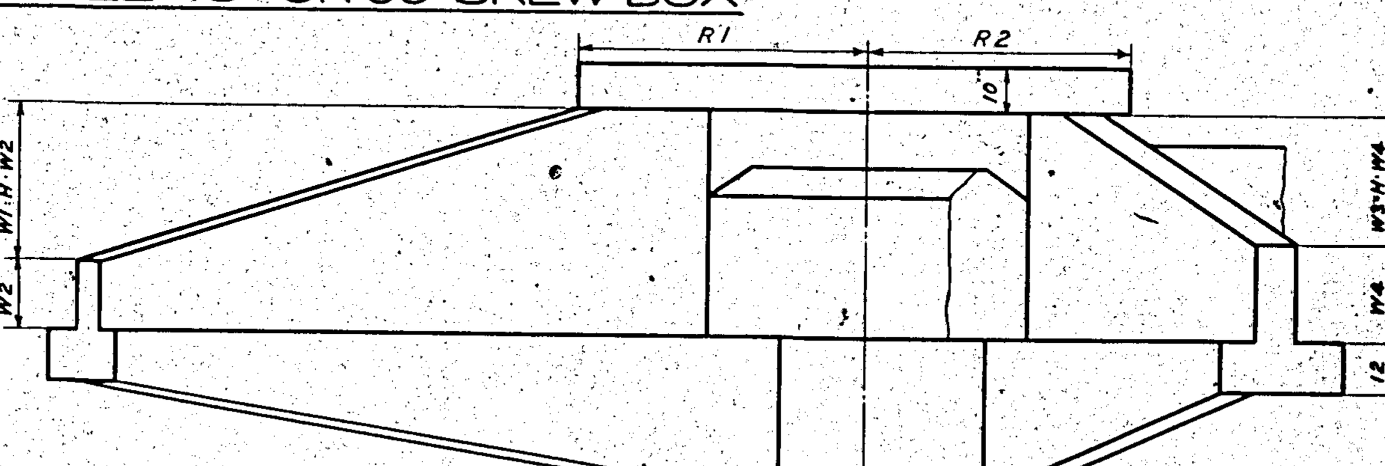

ELEVATION

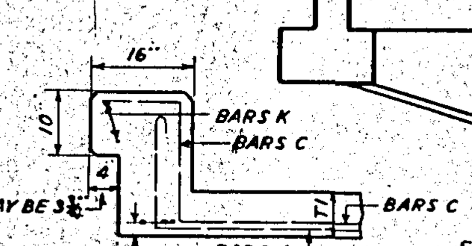

SECTION OF PARAPET
SHOWING BEND ON "A" BARS FOR 60° AND 45° SKEWS

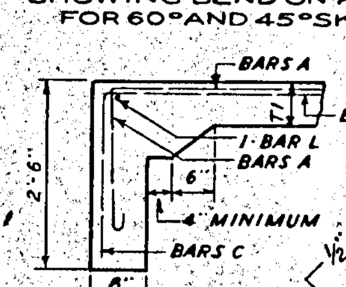

SECTION OF APRON
SHOWING BEND ON "A" BARS FOR 60° AND 45° SKEWS

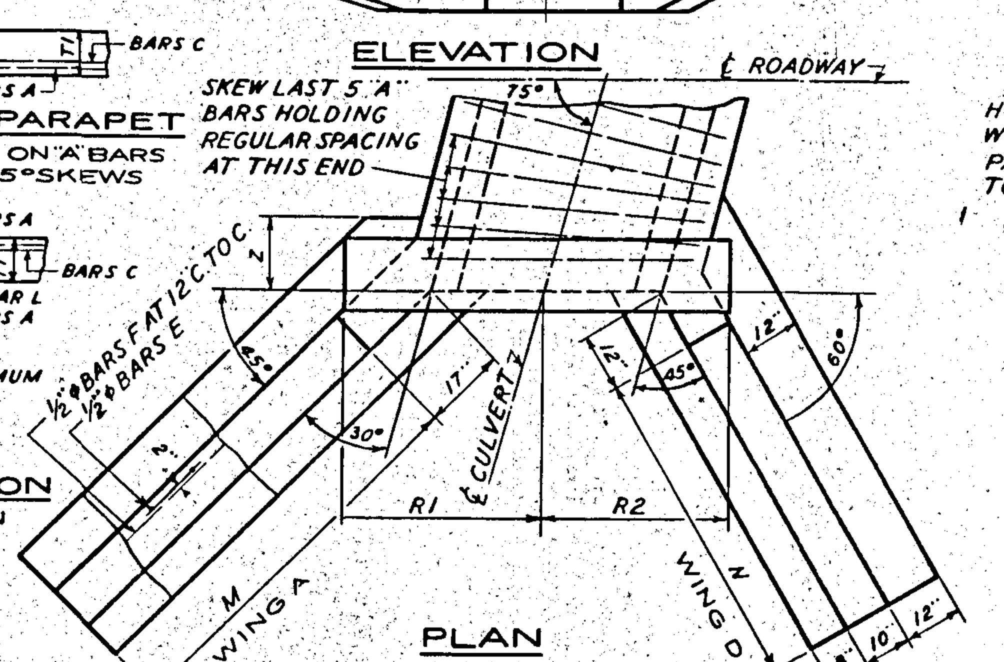

PLAN
75° SKEW

HOOK BARS "A" THAT DO NOT EXTEND FOR FULL WIDTH. BARS IN TOP SLAB TO BE BENT INTO PARAPET AND HOOKED. BARS IN BOTTOM SLAB TO BE BENT INTO TOE WALL AND HOOKED

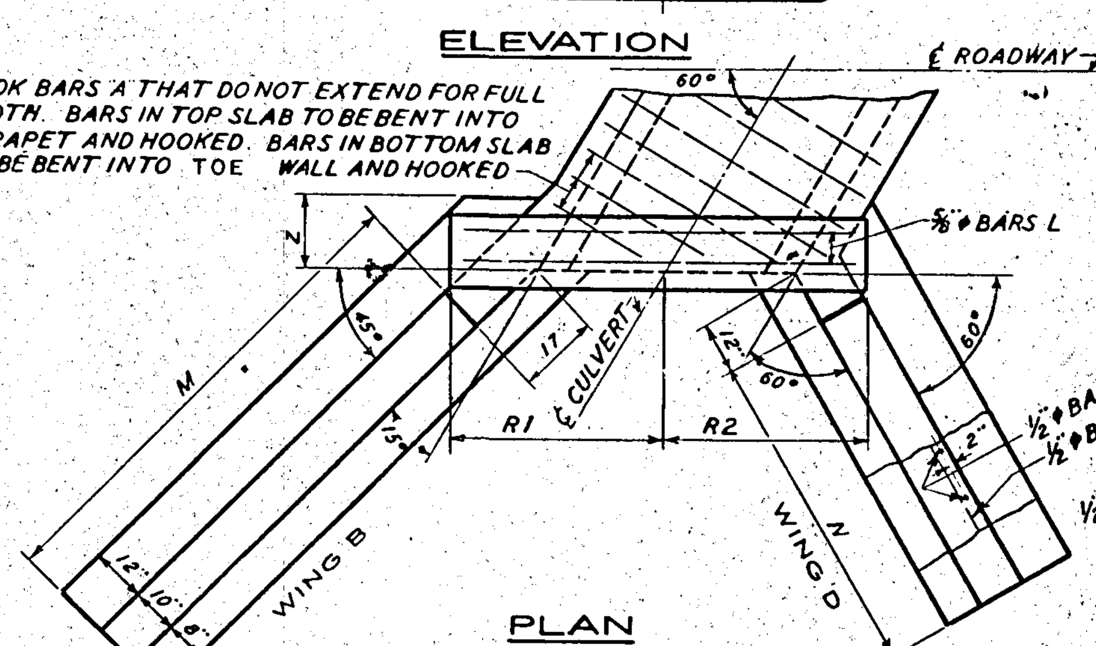

PLAN
60° SKEW

HOOK BARS "A" THAT DO NOT EXTEND FOR FULL WIDTH. TOP SLAB BARS TO BE BENT INTO PARAPET AND HOOKED BOTTOM SLAB BARS TO BE BENT INTO TOE WALL AND HOOKED.

ONE BAR "L" IS IN EACH APRON. REST IN PARAPETS.

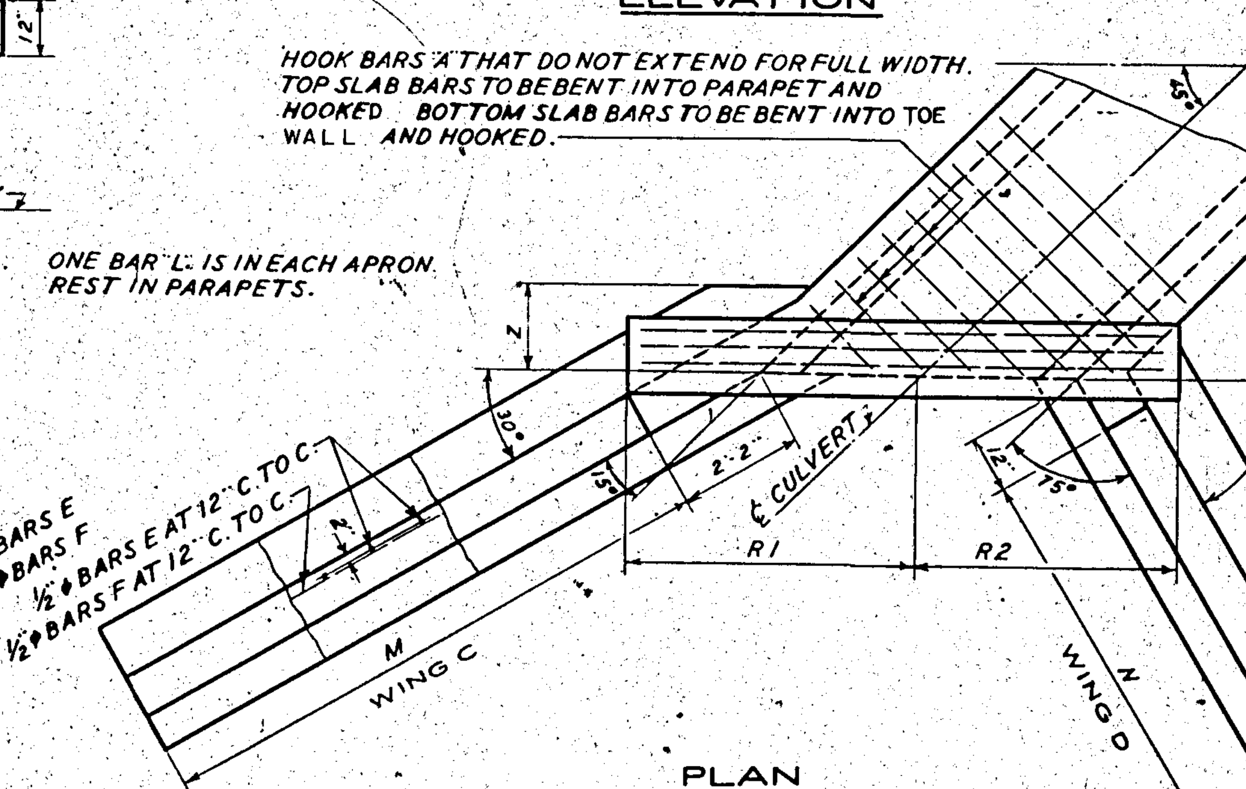

PLAN
45° SKEW

GENERAL NOTES

SPECIFICATIONS - GEORGIA STANDARD.

THIS PLAN IS NOT COMPLETE IN ITSELF - FOR GENERAL NOTES, DETAILS AND DIMENSIONS NOT SHOWN SEE GEORGIA STANDARD NO. 2321 FOR SINGLE CULVERTS AND GEORGIA STANDARD NO. 2325 FOR DOUBLE AND TRIPLE CULVERTS.

△ QUANTITIES - FOR WINGWALLS AND PARAPETS, SEE GEORGIA STANDARD NO. 2331.

QUANTITIES FOR BARREL TO REMAIN AS SHOWN ON GEORGIA STANDARDS NO. 2321 AND NO. 2325 (OR SPECIAL DESIGNS WHEN SPECIFIED).

DESIGN DATA

LOADING - TYPICAL HS 20-44 AND/OR MILITARY LOADING.

DATE	REVISIONS	BY
1-22-74	QUANTITIES - STD. NO 2331	A.J.H.
2-26-80	ADD 4'x5', REM. 2'x2'	R.M.U.

DEPARTMENT OF TRANSPORTATION
STATE OF GEORGIA

STANDARD
REINFORCED CONCRETE BOX CULVERTS
SINGLE 3'X2' TO TRIPLE 6'X6'
FOR 75°, 60° AND 45° SKEWS

NO SCALE

DECEMBER 1959

DESIGNED ____
REDRAWN H.L.K.
TRACED H.L.K.
CHECKED O.P.G. Jr.

SUBMITTED [signature] BRIDGE ENGINEER
APPROVED [signature] STATE HIGHWAY ENGINEER

NUMBER 2328