STATE	PROJECT NUMBER	SHEET No.	TOTAL SHEETS
GA.	EDF-017-3(39)	115	194

REINFORCING STEEL

BARREL DESIGN NO. 1 — 1.5' TO 12.0' FILL OVER BBL. INCL. PAVING / BARREL DESIGN NO. 2 — FOR 12.1' TO 20.0' FILL

CLEAR SPAN	CLEAR HEIGHT	D1 "A" BARS Number	D1 "A" Size	D1 "A" Length	D1 "A" Spacing	D1 "B" BARS Number	D1 "B" Size	D1 "B" Length	D1 "B" Spacing	D1 "C" ½"φ Number	D1 "C" Length	D1 "D" ½"φ Number	D1 "D" Length	D2 "A" BARS Number	D2 "A" Size	D2 "A" Length	D2 "A" Spacing	D2 "B" BARS Number	D2 "B" Size	D2 "B" Length	D2 "B" Spacing	D2 "C" ½"φ Number	D2 "C" Length	D2 "D" ½"φ Number	D2 "D" Length
7'	4'	2 x ("L" in inches ÷ Spacing) + 2 Bars	7/8"φ	10'-0"	7½"	2 x ("L" in inches ÷ Spacing) + 2 Bars	½"φ	5'-3"	12"	16	½ of "L" in Ft. + 4'-2" + 2'-0" for each lap; ½ of "L" in Ft. + 5'-10" + 2'-0" for each lap (Lap + 2 Ft. each lap)	8	"L" in Feet + 4'-6" + 2'-0" for each Lap	2 x ("L" in inches ÷ Spacing) + 2 Bars	7/8"φ	10'-4"	6"	2 x ("L" in inches ÷ Spacing) + 2 Bars	½"φ	5'-6"	12"	16	½ at "L" in Ft. + 4'-2" + 2'-0" for each lap; ½ at "L" in Ft. + 5'-10" + 2'-0" for each lap (Lap + 2 Ft. each lap)	8	"L" in Feet + 4'-6" + 2'-0" for each Lap
	5'			10'-0"	7½"		½"φ	6'-3"	12"	16		10				10'-4"	6"		½"φ	6'-6"	12"	16		10	
	6'			10'-0"	7½"		5/8"φ	7'-3"	12"	16		12				10'-4"	6"		5/8"φ	7'-6"	12"	16		12	
	7'			10'-0"	7½"		5/8"φ	8'-3"	10"	16		14				10'-8"	6"		5/8"φ	8'-7"	10"	16		14	
8'	4'			11'-0"	7"		½"φ	5'-4"	12"	18		8			1"φ	11'-4"	7"		½"φ	5'-8"	12"	18		8	
	5'			11'-0"	7"		½"φ	6'-4"	12"	18		10				11'-4"	7"		½"φ	6'-8"	12"	18		10	
	6'			11'-0"	7"		5/8"φ	7'-4"	12"	18		12				11'-4"	7"		5/8"φ	7'-8"	12"	18		12	
	7'			11'-0"	7"		5/8"φ	8'-5"	10"	18		14				11'-8"	7"		5/8"φ	8'-9"	10"	18		14	
	8'			11'-4"	7"		¾"φ	9'-5"	12"	18		16				11'-8"	7"		¾"φ	9'-10"	12"	18		16	
9'	4'			12'-2"	6½"		½"φ	5'-6"	12"	20		8			1"φ	12'-8"	6½"		½"φ	5'-10"	12"	20		8	
	5'			12'-2"	6"		½"φ	6'-6"	12"	20		10				12'-8"	6½"		½"φ	6'-10"	12"	20		10	
	6'			12'-2"	6"		5/8"φ	7'-6"	12"	20		12				12'-8"	6½"		5/8"φ	7'-11"	12"	20		12	
	7'			12'-2"	6"		5/8"φ	8'-6"	10"	20		14				13'-0"	6½"		5/8"φ	9'-0"	10"	20		14	
	8'			12'-6"	5½"		¾"φ	9'-7"	12"	20		16				13'-0"	6½"		¾"φ	10'-0"	12"	20		16	
	9'			12'-6"	5½"		¾"φ	10'-7"	10"	20		18				13'-4"	6½"		¾"φ	11'-2"	10"	20		18	
	10'			12'-6"	5½"		¾"φ	11'-7"	10"	20		20				13'-6"	6½"		¾"φ	12'-2"	10"	20		20	

WING WALLS AND PARAPETS SAME FOR ALL DEPTHS OF FILLS

"E" BARS AT 12" C. TO C.

CLEAR SPAN	CLEAR HEIGHT	Size		E1	E2	E3	E4	E5	E6	E7	E8	E9	E10
7'	4'	5/8"φ	Number	8	8	8	8	8					
			Length	7'-7"	6'-11"	6'-2"	5'-6	4'-10					
	5'	5/8"φ	Number	8	8	8	8	8	8				
			Length	8'-7"	7'-10	7'-2"	6'-5"	5'-9"	5'-0"				
	6'	5/8"φ	Number	8	8	8	8	8	8	4			
			Length	9'-7"	8'-10	8'-1"	7'-5"	6'-8"	6'-0"	5'-7			
	7'	5/8"φ	Number	8	8	8	8	8	8	8	4		
			Length	10'-7"	9'-10"	9'-1"	8'-5"	7'-8"	6'-11"	6'-3"	5'-10"		
8'	4'	5/8"φ	Number	8	8	8	8	8					
			Length	7'-8"	7'-0"	6'-3"	5'-8"	5'-0"					
	5'	5/8"φ	Number	8	8	8	8	8	8				
			Length	8'-8"	7'-11"	7'-3"	6'-7"	5'-11"	5'-2"				
	6'	5/8"φ	Number	8	8	8	8	8	8	4			
			Length	9'-8"	8'-11"	8'-3"	7'-6"	6'-10	6'-1"	5'-9"			
	7'	5/8"φ	Number	8	8	8	8	8	8	8	4		
			Length	10'-8"	9'-11"	9'-3"	8'-6"	7'-10	7'-1"	6'-4"	6'-0"		
	8'	7/8"φ	Number	8	8	8	8	8	8	8	8		
			Length	12'-10"	11'-11"	11'-0"	10'-2"	9'-4"	8'-5"	7'-7"	6'-8"		
9'	4'	5/8"φ	Number	8	8	8	8	8	4				
			Length	7'-9"	7'-1"	6'-5"	5'-9"	5'-1"	4'-9"				
	5'	5/8"φ	Number	8	8	8	8	8	8				
			Length	8'-9"	8'-1"	7'-4"	6'-8"	6'-0	5'-4"				
	6'	5/8"φ	Number	8	8	8	8	8	8	8			
			Length	9'-9"	9'-0"	8'-4"	7'-8"	7'-0	6'-4"	5'-7"			
	7'	5/8"φ	Number	8	8	8	8	8	8	8	4		
			Length	10'-9"	10'-0"	9'-4"	8'-8"	7'-11"	7'-3"	6'-6"	6'-2"		
	8'	7/8"φ	Number	8	8	8	8	8	8	8	8	4	
			Length	12'-11"	12'-0	11'-2"	10'-4"	9'-6"	8'-7"	7'-9"	6'-11"	6'-5"	
	9'	7/8"φ	Number	8	8	8	8	8	8	8	8	8	
			Length	14'-4"	13'-4"	12'-5"	11'-6"	10'-8"	9'-0"	8'-10	7'-1"	7'-0"	
	10'	7/8"φ	Number	8	8	8	8	8	8	8	8	8	8
			Length	15'-10"	14'-10	13'-11"	12'-11"	12'-0	11'-1"	10'-1"	9'-3"	8'-3"	7'-4"

"F" BARS ½"φ AT 12" C.TO C. / "J" BARS ¾"φ AT 12" C.TO C. TOP & BOTTOM / "K" BARS 5/8"φ

CLEAR SPAN	CLEAR HEIGHT		F1	F2	F3	F4	F5	F6	F7	J1	J2	J3	J4	J5	J6	J7	K NO.	K LENGTH
7'	4'	Number	20	4	4	4											8	8'-10"
		Length	9'-8"	7'-7"	4'-8"	1'-9"												
	5'	Number	20	4	4	4	4										8	8'-10"
		Length	11'-2"	10'-4	7'-5"	4'-7	1'-9"											
	6'	Number	24	4	4	4	4										8	8'-10"
		Length	12'-8"	10'-1"	7'-4"	4'-7"	1'-9"											
	7'	Number	24	4	4	4	4	4									8	8'-10"
		Length	14'-2"	12'-9"	10'-0	7'-3"	4'-6	1'-9"										
8'	4'	Number	20	4	4	4											8	9'-10"
		Length	9'-8"	8'-0	5'-0"	2'-0"												
	5'	Number	20	4	4	4	4										8	9'-10"
		Length	11'-2"	10'-9"	7'-10	4'-11"	2'-0"											
	6'	Number	24	4	4	4	4										8	9'-10"
		Length	12'-8"	10'-6"	7'-8"	4'-10	2'-0"											
	7'	Number	24	4	4	4	4	4									8	9'-10"
		Length	14'-2"	13'-2"	10'-4"	7'-7"	4'-9"	2'-0"										
	8'	Number	28	4	4	4	4	4		24	24	24	24	32			8	10'-2"
		Length	15'-8"	13'-1"	10'-4"	7'-6"	4'-10	2'-0"		4'-10	4'-7"	4'-4"	4'-1"	3'-10"				
9'	4'	Number	20	4	4	4											8	10'-10"
		Length	10'-2"	8'-4	5'-4"	2'-4"												
	5'	Number	20	4	4	4	4										8	10'-10"
		Length	11'-8"	11'-2"	8'-2"	5'-3"	2'-3"											
	6'	Number	24	4	4	4	4										8	10'-10"
		Length	13'-2"	10'-11"	8'-1"	5'-2"	2'-3"											
	7'	Number	24	4	4	4	4	4									8	10'-10"
		Length	14'-8"	13'-7	10'-8"	7'-11"	5'-1"	2'-3"										
	8'	Number	28	4	4	4	4	4		24	24	24	28	28			8	11'-2"
		Length	16'-2"	13'-5	10'-4"	7'-10	5'-1"	2'-3"		4'-10	4'-7"	4-4'	4'-1"	3'-10"				
	9'	Number	28	4	4	4	4	4	4	16	24	16	24	24	40		8	11'-2"
		Length	17'-2"	16'-0	13'-4"	10'-6"	7'-9"	5'-0"	2'-3"	5'-4"	5'-1"	4'-10	4'-7"	4'-4"	3'-10"			
	10'	Number	32	4	4	4	4	4	4	24	32	16	16	16	16	40	8	11'-2"
		Length	18'-11"	16'-3"	13'-5"	10'-9"	7'-11"	5'-2"	2'-6"	5'-7"	5'-4"	5'-1"	4'-10	4'-7"	4'-4"	3'-10"		

DIMENSIONS / QUANTITIES

CLEAR SPAN	CLEAR HEIGHT	D1 T_1	D1 T_2	D1 V	D1 P	D1 R	D1 H	D1 W_1	D2 T_1	D2 T_2	D2 V	D2 P	D2 R	D2 H	D2 W_1	M	W_2	X	Steel lbs per lin. ft. of barrel Design No. 1	Steel lbs per lin. ft. of barrel Design No. 2	Wing walls & parapets total lbs.	Concrete cu. yds. per lin. ft. of barrel Design No. 1	Concrete cu. yds. per lin. ft. of barrel Design No. 2	Wingwalls & parapets total cu. yds. Des. 1	Wingwalls & parapets total cu. yds. Des. 2
7'	4'	9½"	10"	5'-7"	8'-8"	9'-2"	5'-4"	3'-2½"	11"	10"	5'-10"	8'-8"	9'-2"	5'-6"	3'-4½"	9'-0"	2'-1½"	0	92.6	112.1	499	0.764	0.845	12.59	12.71
	5'	9½"	10"	6'-7"	8'-8"	9'-6"	6'-4"	3'-9½"	11"	10"	6'-10"	8'-8"	9'-6"	6'-6"	3'-11½"	10'-6"	2'-6½"	0	95.5	115.0	627	0.826	0.906	15.12	15.25
	6'	9½"	10"	7'-7"	8'-8"	9'-6"	7'-4"	4'-5"	11"	10"	7'-10"	8'-8"	9'-6"	7'-6"	4'-7"	12'-0"	2'-11"	0	104.0	123.7	752	0.888	0.968	17.84	17.99
	7'	9½"	10"	8'-7"	8'-8"	9'-10"	8'-4"	5'-0"	11½"	12"	8'-11"	9'-0"	9'-10"	8'-6"	5'-2"	13'-6"	3'-4"	0	111.2	133.9	912	0.950	1.167	20.89	21.19
8'	4'	10"	10"	5'-8"	9'-8"	10'-2"	5'-5"	3'-1½"	12"	10"	6'-0"	9'-8"	10'-2"	5'-7½"	3'-4"	9'-0"	2'-3½"	0	106.6	134.3	515	0.853	0.972	13.08	13.23
	5'	10"	10"	6'-8"	9'-8"	10'-6"	6'-5"	3'-8½"	12"	10"	7'-0"	9'-8"	10'-6"	6'-7½"	3'-11"	10'-6"	2'-8½"	0	109.5	137.2	646	0.915	1.034	15.64	15.80
	6'	10"	10"	7'-8"	9'-8"	10'-6"	7'-5"	4'-4"	12"	10"	8'-0"	9'-8"	10'-6"	7'-7½"	4'-6½"	12'-0"	3'-1"	0	118.1	146.0	770	0.976	1.096	18.38	18.56
	7'	10½"	10"	8'-9"	9'-8"	10'-10"	8'-5"	4'-11"	12½"	12"	9'-1"	10'-0"	10'-10"	8'-7½"	5'-1½"	13'-6"	3'-6"	0	125.5	156.7	932	1.068	1.299	21.45	21.83
	8'	10½"	12"	9'-9"	10'-0"	10'-10"	9'-5"	5'-6"	13"	12"	10'-2"	10'-0"	10'-10"	9'-7½"	5'-8½"	15'-0"	3'-11"	1'-0"	136.9	166.2	2579	1.250	1.404	26.13	26.41
9'	4'	11"	10"	5'-10"	10'-8"	11'-2"	5'-6½"	3'-3½"	13"	10"	6'-2"	10'-8"	11'-2"	5'-9"	3'-6"	9'-6"	2'-3"	0	123.0	157.1	556	0.980	1.112	13.95	14.17
	5'	11"	10"	6'-10"	10'-8"	11'-6"	6'-6½"	3'-10½"	13"	10"	7'-2"	10'-8"	11'-6"	6'-9"	4'-1"	11'-0"	2'-8"	0	133.4	160.0	670	1.042	1.174	16.56	16.79
	6'	11"	10"	7'-10"	10'-8"	11'-6"	7'-6½"	4'-5½"	13½"	10"	8'-3"	10'-8"	11'-6"	7'-9"	4'-8"	12'-6"	3'-1	0	142.1	169.1	820	1.104	1.269	19.38	19.66
	7'	11"	10"	8'-10"	10'-8"	11'-10"	8'-6½"	5'-1"	14"	12"	9'-4"	11'-0"	11'-10"	8'-9"	5'-3½"	14'-0"	3'-5½"	0	149.3	180.1	961	1.166	1.478	22.47	22.95
	8'	11½"	12"	9'-11"	11'-0"	11'-10"	9'-6½"	5'-8"	14"	12"	10'-4"	11'-0"	11'-10"	9'-9"	5'-10½"	15'-6"	3'-10½"	1'-0"	170.4	189.5	2675	1.383	1.552	27.24	27.59
	9'	11½"	12"	10'-11"	11'-0"	12'-0"	10'-6½"	6'-1"	15"	14"	11'-6"	11'-4"	12'-0"	10'-9"	6'-3½"	16'-6"	4'-5½"	1'-6"	181.4	204.7	3106	1.457	1.836	31.00	31.85
	10'	11½"	12"	11'-11"	11'-0"	12'-4"	11'-6½"	6'-8"	15"	15"	12'-6"	11'-6"	12'-4"	11'-9"	6'-10½"	18'-0"	4'-10½"	2'-0"	186.6	211.6	3676	1.531	2.000	36.17	37.35

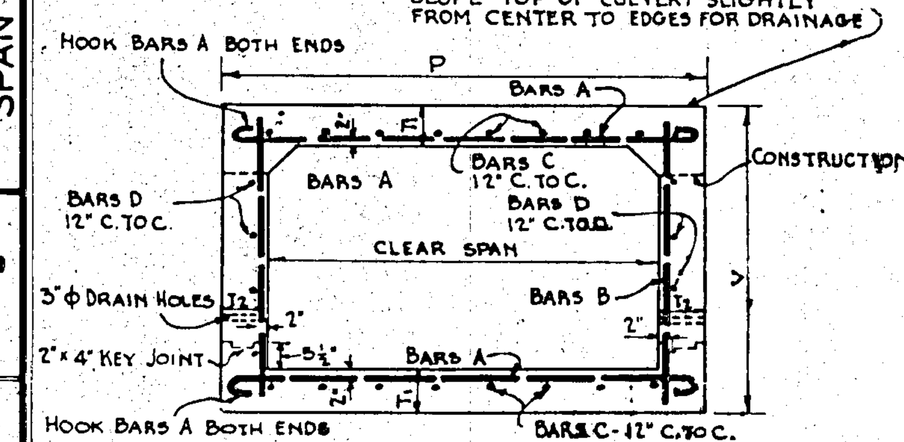

SECTION OF BARREL

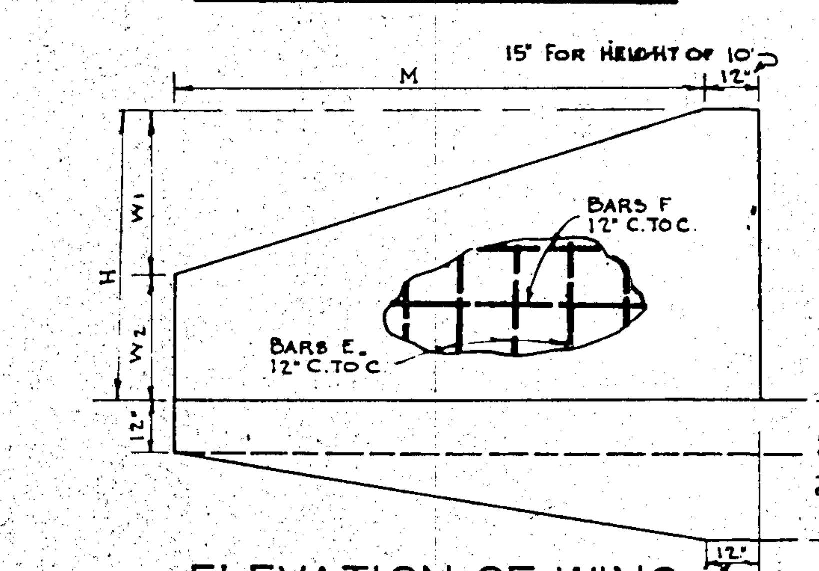

ELEVATION OF WING

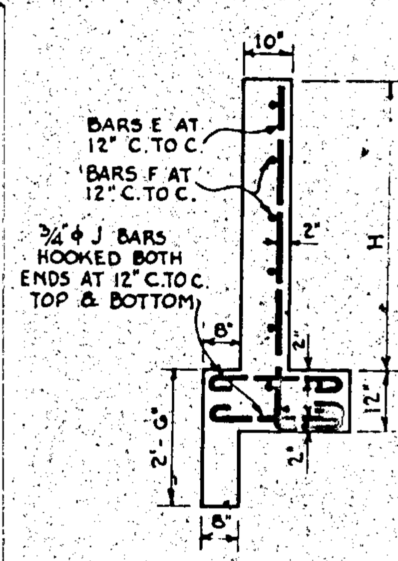

SECTION A-A

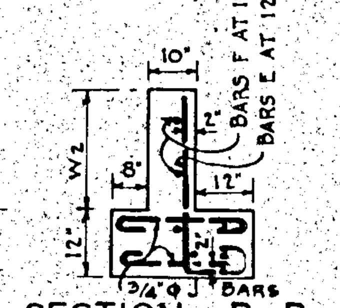

SECTION B-B

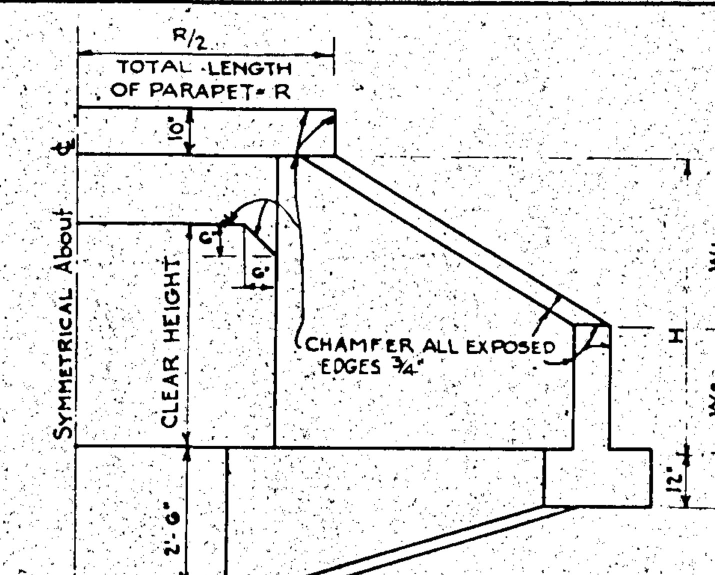

HALF END ELEVATION

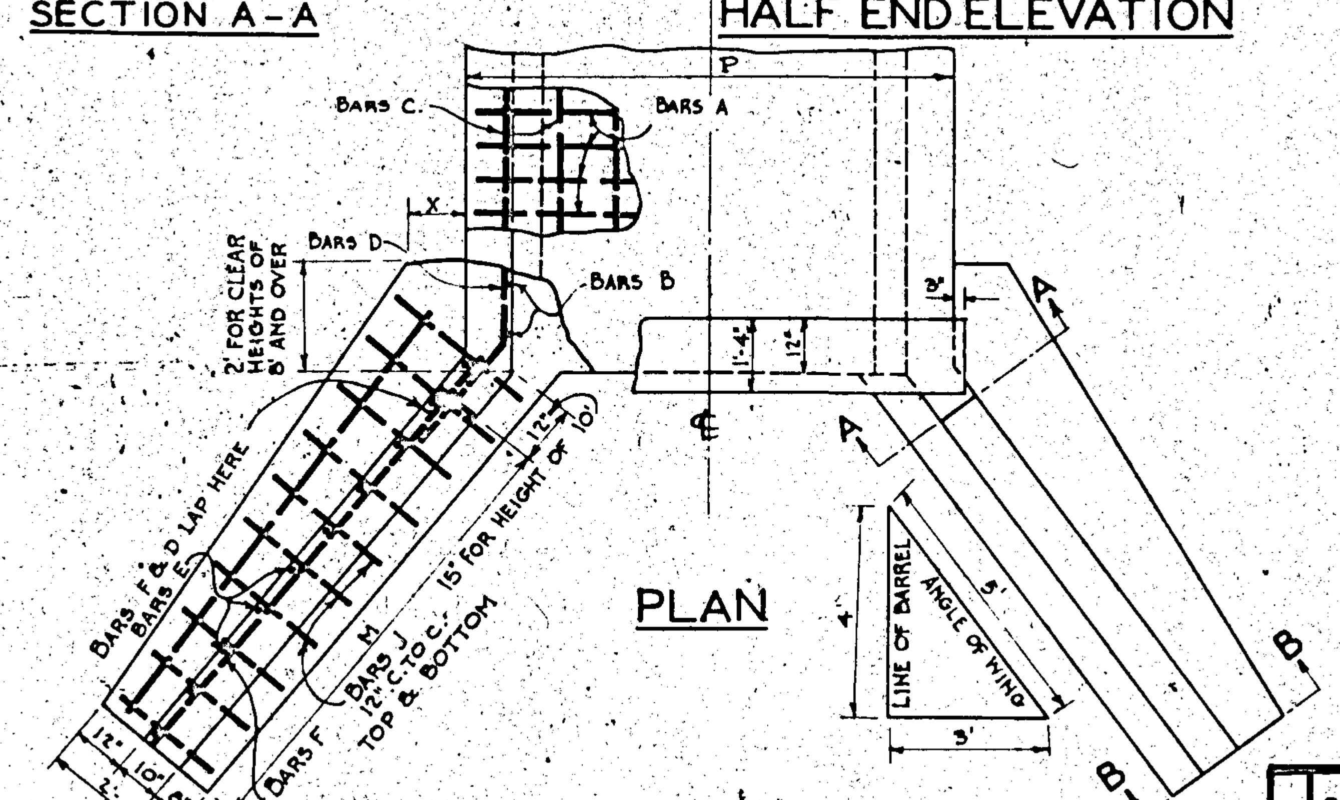

PLAN

GENERAL NOTES

CHAMFER ALL EXPOSED EDGES 3/4".

APRON WALLS - APRON WALLS MAY BE OMITTED IF ENGINEER APPROVES. ENGINEER MAY ALSO REQUIRE BOTTOM SLAB TO EXTEND TO ENDS OF WINGS AND APRON PLACED AT THIS POINT.

QUANTITIES - QUANTITIES FOR STEEL SHOWN ON THIS SHEET COMPUTED CONSIDERING ALL A, B, C AND D BARS AS PART OF BARREL QUANTITIES. STEEL PER LINEAL FOOT IS AN AVERAGE VALUE FOR A CULVERT OF 40' LENGTH ALLOWING ONE LAP IN LONGITUDINAL BARS.

SIZE OF CULVERT - IN DESIGNATING SIZES OF CULVERTS STATE CLEAR SPAN FIRST, I.E., A 7'×5' CULVERT HAS A 7' CLEAR SPAN AND A 5' CLEAR HEIGHT. L = LENGTH OF CULVERT = DISTANCE BETWEEN BACKS OF PARAPETS.

COVER - CULVERT TO HAVE MINIMUM COVER OF 1.0' BELOW BOTTOM OF BASE OR CONCRETE PAVEMENT.

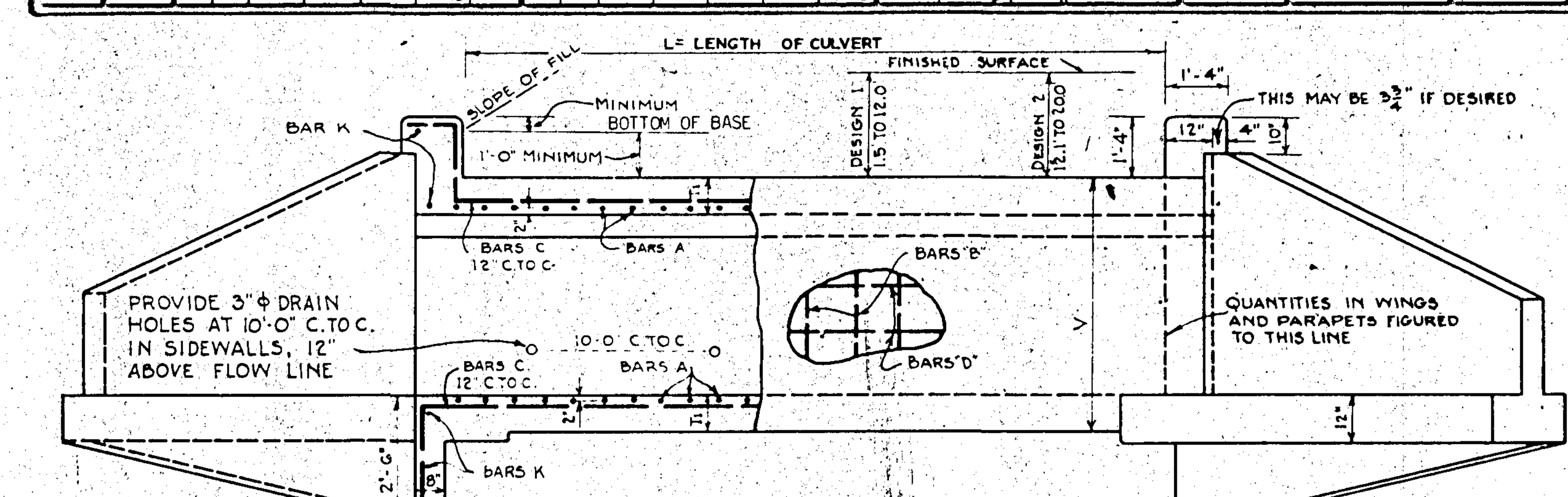

SECTION OF BARREL — SIDE VIEW — ELEVATION

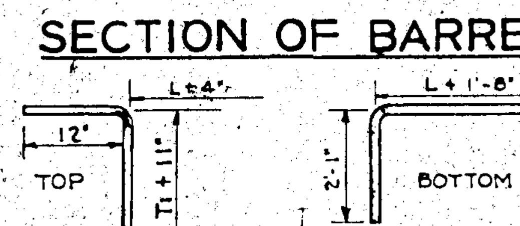

C BARS

D BARS

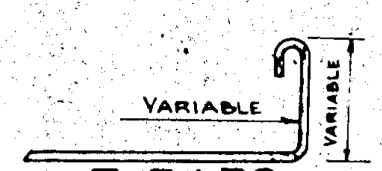

E BARS

DESIGN DATA

LOADING - TYPICAL H-20 S16-44 AND/OR MILITARY SPECIFICATIONS - A.A.S.H.O. 1957, T 58.

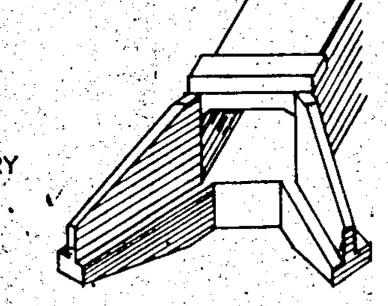

DATE	REVISIONS	BY
4-22-69	QUANTITIES	G.H.S.-A.J.H.

STATE HIGHWAY BOARD OF GEORGIA
BRIDGE DEPARTMENT

STANDARD
REINFORCED CONCRETE BOX CULVERTS
SINGLE 7'X4' TO SINGLE 9'X10'
FOR DEPTHS OF FILL UP TO 20 FT.

NO SCALE — DECEMBER 1959

DESIGNED R.B.D.
TRACED B.H.J.
CHECKED O.P.G. Jr.
REVISED

SUBMITTED [signature]
APPROVED M. L. Shadburn

NUMBER 2323