STATE	PROJECT NUMBER	SHEET NO.	TOTAL SHEETS
GA.	EDF-017-3(39)	110	194

CONCRETE FLARED END SECTION

END SECTION TO PIPE JOINT SHOWN AS TYPICAL: HUB END ON OUTLET END SECTIONS; SOCKET END ON INLET END SECTIONS (SEE NOTE "A")

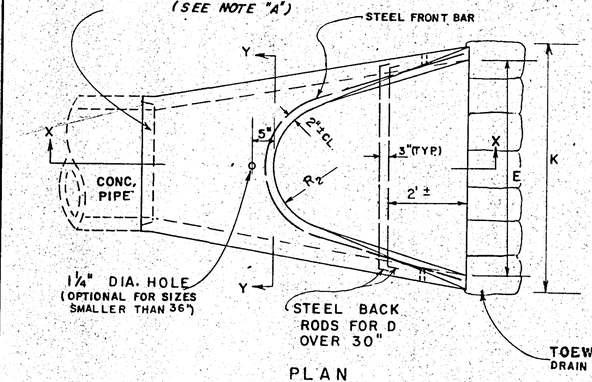

PLAN

INSTALLATION: (D OVER 30") CABLE, CHAIN, OR LIFTING PIN WILL EXTEND THRU 1¼" HOLE WITH A PLATE OR REBAR CONNECTED INSIDE THE CONC. SECTION TO PROVIDE ADEQUATE BEARING AREA OR A LIFTING ASSEMBLY DEVICE MAY BE USED TO GIVE 3 LIFT POINTS. HOOKS CONNECTED DIRECTLY TO CONCRETE IS NOT PERMITTED. DAMAGE FROM IMPROPER HANDLING SHALL BE CAUSE FOR REJECTION.

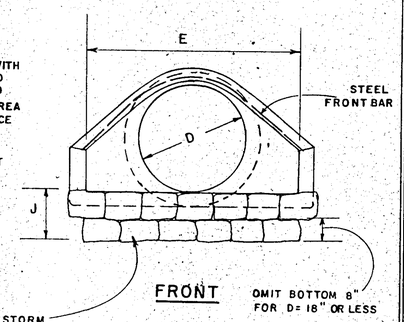

FRONT

NOTE: DO NOT CUT CONCRETE PIPE. USE FULL LENGTH SECTIONS ONLY. WARP SLOPE TO CONFORM WITH PIPE LENGTH AND END SECTION.

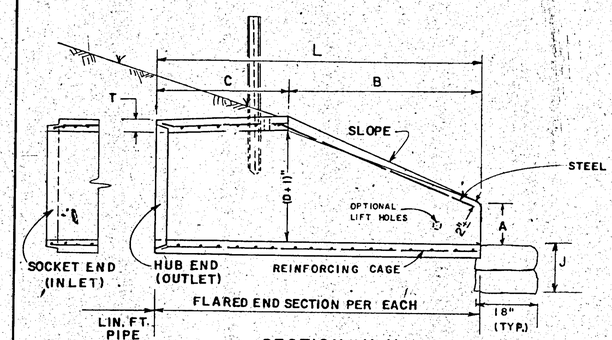

SECTION X-X

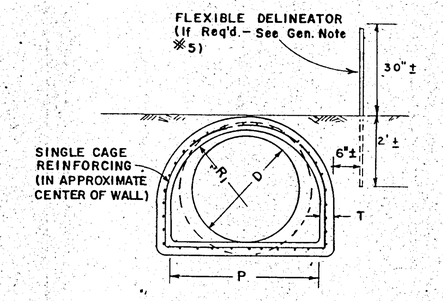

SECTION Y-Y

REINFORCING CAGE:

(1.) WIRE FABRIC HAVING SAME STEEL AREA AS INNER CAGE FOR CL. III PIPE, AASHTO M-170, BUT PLACED IN CENTER OF WALL.

(2.) ALTERNATE: #3 BARS SPACED 12" ± LONGITUDINALLY WITH #2 BARS TRANSVERSELY AT 6" O.C. MAX. SPACING, SPOT WELDED OR TIED TO FORM CAGE. (BACK RODS MAY BE OMITTED.)

NOTE "A":

CONTRACTOR WILL INFORM PRODUCER IF CONCRETE FLARED END SECTION IS FOR INLET OR FOR OUTLET END. SOCKET (TONGUE OR SPIGOT) END IS REQUIRED FOR INLETS. HUB (GROOVE OR BELL) END IS REQUIRED FOR OUTLETS. SOCKET TO SOCKET OR HUB TO HUB JOINT WILL NOT BE ACCEPTED UNLESS A REINFORCED CONCRETE COLLAR IS BUILT AROUND THE JOINT WITH NO PAYMENT BEING MADE FOR THE COLLAR.

FLARED END SECTIONS SHALL BE JOINTED TO PIPE WITH ALL SPACE IN THE JOINT FILLED WITH EITHER BITUMINOUS PLASTIC CEMENT OR PREFORMED PLASTIC GASKET (SEC. 848).

WALL THICKNESS (T) IS SHOWN AS NOMINAL AND MAY BE INCREASED AT PRODUCER'S OPTION FOR DESIRED JOINT DESIGN OR TO ALLOW A FLAT OUTSIDE BOTTOM ON THE FLARE, WITH INSIDE DIMENSIONS OF FLARE RETAINED AS SHOWN

T = PIPE WALL THICKNESS (0.0833D + 1" ± TYPICAL)

DIMENSIONS AND REINFORCING FOR CONCRETE FLARED END SECTIONS (± 1" TOLERANCE)

PIPE DIA.	FRONT BAR	BACK RODS	SLOPE	A	B	C	L	E	P	R_1	R_2
12"	1-#3x5'4"	NOT REQ'D.	2.2:1	4"	2'0"	4'1"	6'1"	2'0"	1'8"	10"	9"
15"	1-#3x6'0"	NOT REQ'D.	2.2:1	6"	2'3"	3'10"	6'1"	2'6"	2'0"	1'0"	11"
18"	1-#3x7'2"	NOT REQ'D.	2.2:1	9"	2'3"	3'10"	6'1"	3'0"	2'5"	1'4"	1'0"
24"	1-#3x9'10"	NOT REQ'D.	2.4:1	10"	3'8"	2'6"	6'2"	4'0"	2'9"	1'5"	1'2"
30"	1-#4x11'8"	NOT REQ'D.	2.4:1	12"	4'6"	1'8"	6'2"	5'0"	3'1"	1'6"	1'3"
36"	1-#4x13'10"	2-#4x6'3"	2.4:1	15"	5'3"	2'11"	8'2"	6'0"	4'0"	2'0"	1'8"
42"	1-#4x13'10"	2-#4x7'4"	2.4:1	21"	5'3"	2'11"	8'2"	6'6"	4'6"	2'4"	1'10"

NOTE: SPECIFIED REINFORCING IS MINIMAL AND MAY BE INCREASED AT PRODUCER'S OPTION TO AID CASTING & HANDLING. ALTERNATE REINFORCEMENT PERMITTED IF APPROVED.

METAL FLARED END SECTION

(USE ONLY WITH COR. METAL PIPE)

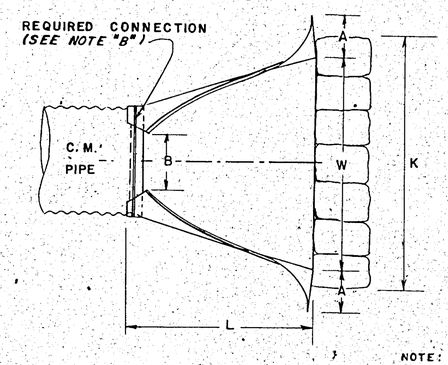

PLAN

NOTE: GALVANIZED STEEL FLARED END SECTIONS ARE TO BE USED ONLY WITH CORRUGATED STEEL PIPE AND ALUMINUM FLARED END SECTIONS ARE TO BE USED ONLY WITH CORRUGATED ALUMINUM PIPE UNLESS OTHERWISE APPROVED BY D.O.T. OFFICE OF MATERIALS AND TESTS.

FLARED END SECTION DIMENSIONS

PIPE SIZE "D"	THICKNESS GALV. STEEL	THICKNESS ALUM.	A A=0.4D ±1"	B B=0.5D ±1"	H H=0.25D ±1" (MIN 6")	L L=1.67D ± 1½"	W W=2.0D ±2"
12"	.064"	.060"	5"	6"	6"	1'8"	2'0"
15"	.064"	.060"	6"	7"	6"	2'3"	2'6"
18"	.064"	.060"	7"	9"	6"	2'6"	3'0"
24"	.064"	.060"	9"	1'0"	6"	3'4"	4'0"
30"	.079"	.105"	1'0"	1'3"	7"	4'2"	5'0"
36"	.079"	.105"	1'2"	1'6"	9"	5'0"	6'0"
42"	.109"	.164"	1'5"	1'9"	10"	5'10"	7'0"

NOTE: WHERE METAL FLARED END SECTIONS ARE USED WITH MULTIPLE PIPE LINES, THE STANDARD SPACING BETWEEN PIPES (S=D OR 3 FT.) MAY HAVE TO BE INCREASED (S=1.75 D TYPICAL). TO PREVENT OVERLAP OF END SECTION WINGTIPS. SEE ALSO STD. 1030D.

NOTE:
SLOPE DRAIN PIPES WILL REQUIRE AN ELBOW FOR CONNECTION TO THE FLARED END SECTION. PAYMENT FOR SLOPE DRAIN PIPE WILL INCLUDE THIS ELBOW.

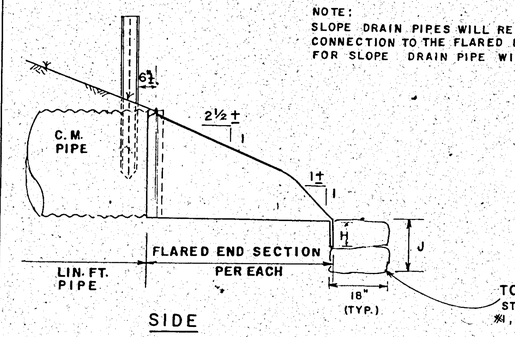

SIDE

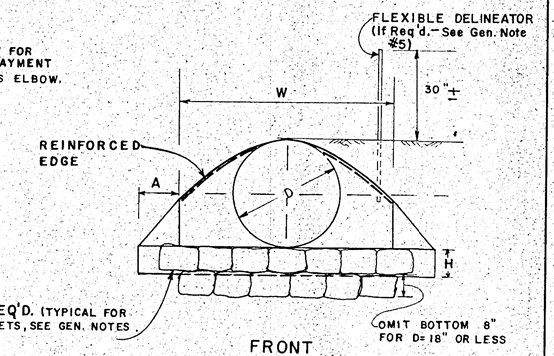

FRONT

NOTE "B":

THE CONNECTION BETWEEN METAL FLARED END SECTION AND C.M. PIPE WILL BE ONE OF THE FOLLOWING:

(a) A STRAP BAND OR THREADED ROD PROVIDED BY THE MANUFACTURER WILL LOCK END SECTION ONTO PIPE. A CORRUGATION AT THE PIPE END WILL BE NON-SPIRALED (PERPENDICULAR TO ℄ OF PIPE).

(b) A DIMPLE BAND COLLAR WILL BE SHOP BOLTED TO END SECTION. PIPE WILL BE INSERTED INTO THE BAND COLLAR TO MEET THE END SECTION.

(c) A STUB PIPE WILL BE RIVITED TO THE END SECTION AND THE MAIN PIPE CONNECTED TO THE STUB WITH A NORMAL CONNECTING BAND.

(d) OTHER TYPE CONNECTION IF RECOMMENDED BY MANUFACTURER AND APPROVED BY THE D.O.T.

TOEWALL DIMENSIONS AND QUANTITIES

D	J	K	ALTERNATE MATERIAL QUANTITIES: SAND CEMENT BAG RIP RAP 8" THICK NO. BAGS.	SAND CEMENT BAG RIP RAP 8" THICK SQ. YDS.	CONCRETE (CL. A or B) OR MORTAR RUBBLE MASONRY CU. FT. ⊗	CONCRETE (CL. A or B) OR MORTAR RUBBLE MASONRY CU. YDS. ⊗	STONE GROUT RIPRAP OR STONE DUMP RIPRAP THICKNESS ⊗	STONE GROUT RIPRAP OR STONE DUMP RIPRAP SQ. YDS. ⊗
12"	8"	3'	3	0.500	3	0.111	8"	0.500
15"	8"	3'	3	0.500	3	0.111	8"	0.500
18"	8"	4'	4	0.667	4	0.148	8"	0.667
24"	16"	5'	9	1.500	10	0.370	16"	0.833
30"	16"	6'	11	1.833	12	0.444	16"	1.000
36"	16"	7'	13	2.167	14	0.518	16"	1.166
42"	16"	8'	15	2.500	16	0.592	16"	1.333

⊗ QUANTITIES SHOWN FOR INFORMATION

GENERAL NOTES:

1. TOEWALLS ARE FOR OUTLETS OF STORM DRAINS, EXCEPT WHERE CONCRETE DITCH PAVING OR OTHER EROSION PROTECTION IS PROVIDED OR WHERE THE OUTLET VELOCITY IS LESS THAN 8 FT./SEC. TOEWALLS ARE NOT REQUIRED FOR SIDE DRAINS, SLOPE DRAINS OR INLETS OF STORM DRAINS. THIS CRITERIA MAY BE VARIED WHERE SPECIFIED BY THE DESIGNER OR THE ENGINEER.
2. TOEWALLS WHICH ARE CONSTRUCTED WILL BE PAID FOR AS SQ. YDS. OF SAND CEMENT BAG RIPRAP 8" THICK. CONTRACTOR MAY ELECT TO USE ALTERNATE MATERIALS WITH NO ADJUSTMENTS TO BE MADE FOR PAYMENT.
3. TOEWALL DIMENSIONS ARE NOMINAL. TOEWALLS CONSTRUCTED WITH ALTERNATE MATERIALS TO HAVE APPROXIMATELY THE SAME DIMENSIONS AS INDICATED FOR RIPRAP. TOEWALLS CONSTRUCTED WITH CONCRETE MAY BE TRENCH FORMED. PLACEMENT OF RIPRAP MAY DIFFER FROM DETAILS SHOWN IF SO APPROVED BY THE ENGINEER.
4. CENTERLINE OF FLARED END SECTION WILL ALIGN WITH CENTERLINE OF PIPE. IF PIPE IS SKEWED, THE EMBANKMENT SLOPE WILL BE WARPED TO CONFORM WITH END SECTION.
5. FLEXIBLE DELINEATORS SHALL BE REQUIRED AT CROSS DRAIN FLARED END SECTIONS, BOTH INLET AND OUTLET. PAYMENT FOR FLARED END SECTION WILL INCLUDE DELINEATORS. SEE DETAIL AND NOTES BELOW. DELINEATORS NOT REQ'D. FOR SIDE DRAIN, SLOPE DRAIN, OR LONG. PIPE.

1" x 12" LONG YELLOW VINYL TAPE STRIP ON EACH SIDE OF RIDGE.

DELINEATOR POST SECTION (TYP.)

NOTE:
DELINEATOR POST SHALL CONFORM TO SEC. 911 FOR FLEXIBLE DELINEATOR POST, EXCEPT REFLECTIVE SHEETING IS NOT REQUIRED AND LENGTH IS 4'-6" FROM TOP TO BOTTOM POINT. ALTERNATES PERMITTED IF APPROVED BY D.O.T. LABORATORY.

REV.		
NOTE "A" CONC. SEC. REINF.	5-27-83	
	5-4-82	

DEPARTMENT OF TRANSPORTATION
STATE OF GEORGIA

STANDARD

FLARED END SECTIONS FOR PIPES

NO SCALE — REV. & REDR. MARCH, 1981

DES. R.M.U.
REV. R.M.U.
RETR. G.M.E.
CHK. J.M.W.

(SUBMITTED) Hayden Hardy
STATE ROAD & AIRPORT DESIGN ENGR.
(APPROVED) Thomas D. Moreland
STATE HIGHWAY ENGINEER

NUMBER 1120

FORM EF6