STATE	PROJECT NUMBER	SHEET NO.	TOTAL SHEETS
GA.	EDF-017-3(39)	109	194

CIRCULAR PRECAST REINFORCED CONCRETE SECTIONS

ADAPTER TYPE 1

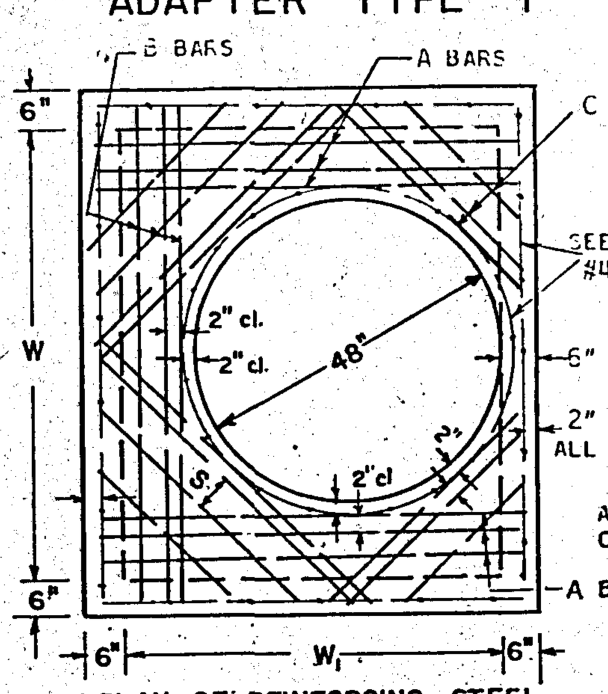

PLAN OF REINFORCING STEEL

NOTE:
WHERE W=48" (ONLY) A BARS NOT REQUIRED

WHERE W1=48" (ONLY) B BARS NOT REQUIRED

FOR CONSTRUCTION OF BOX TYPE BASES AND W. AND W. DIMENSIONS, SEE APPLICABLE STANDARDS FOR CATCH BASINS OR DROP INLETS.

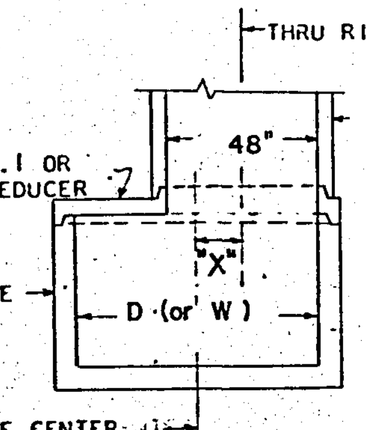

D (or W)	"X"
54"	3"
60"	6"
72"	1'-0"
78"	1'-3"
84"	1'-6"

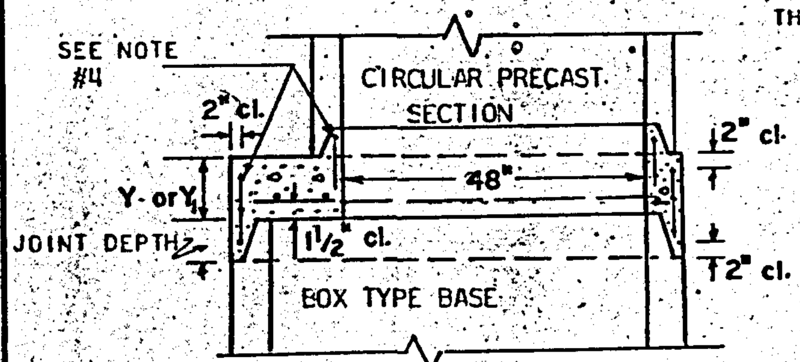

SECTIONAL DETAIL

FIRST 2 BARS SPACED WITH 2" CL. AS SHOWN. ALL OTHERS MAX. SPACING OF "S" C. TO C. BARS SHALL BE IN BOTTOM OF SLAB WITH 1-1/2" CLEARANCE.

*WHERE W. AND W DIMENSIONS DIFFER, USE SLAB THICKNESS AND REINFORCEMENTS FOR LARGER DIMENSION.

Y = MIN. THICKNESS WHERE HEIGHT OF FILL IS 12 FT. OR LESS ABOVE TOP OF ADAPTER TYPE I OR CIRCULAR REDUCER.
Y_1 = MIN. THICKNESS WHERE HEIGHT OF FILL ABOVE ADAPTER TYPE I OR CIRCULAR REDUCER= OVER 12 FT.

W & W* or D	BAR SIZE	S (Max)	Y_o (Min)	Y_1 (Min)
48"	#4	6"	6"	6"
54"	#4	6"	8"	8"
60"	#5	6"	8"	9"
66"	#6	6"	8"	10"
72"	#6	5½"	9"	11"
84"	#6	5"	9"	12"

CIRCULAR RISER SECTIONS- DESIGN AND STEEL REINFORCEMENT TO COMPLY WITH A.S.T.M. C-478 FOR PRECAST MANHOLE SECTIONS HT.=1'0" TO 4'0" EACH.

KEYED JOINT REQUIRED AT ALL SECTIONS UNLESS NOTED OTHERWISE

CIRCULAR BASE UNIT - WALL DESIGN AND REINFORCEMENT TO COMPLY WITH A.S.T.M. C-478 EXCEPT THAT MIN. (T) THICKNESS =5" AND ALL PRECAST OPENINGS FOR PIPES SHALL HAVE TWO ADDITIONAL VERTICAL REINFORCING BARS AS SHOWN.

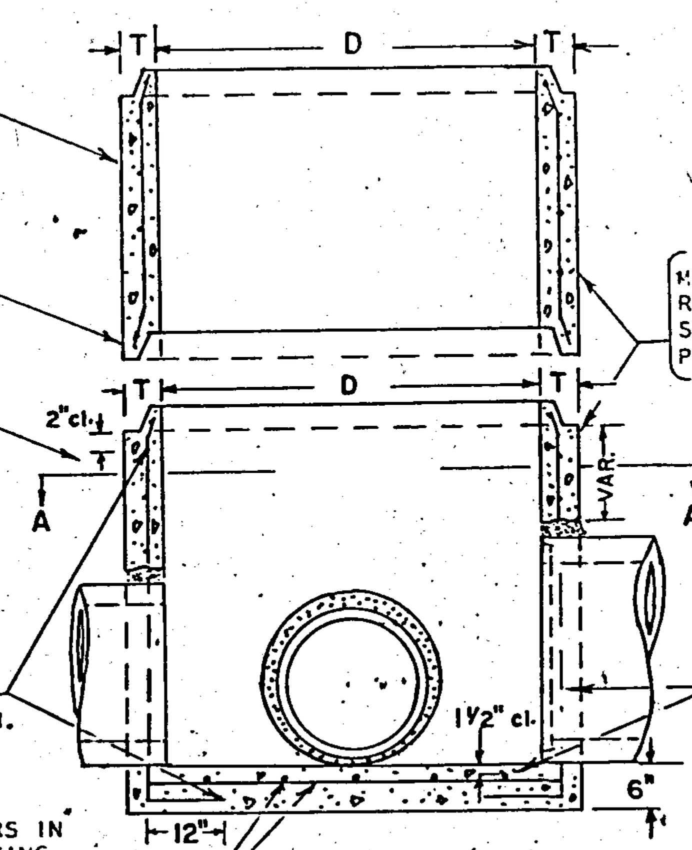

MIN WALL THICKNESS (T)		
D	BASE	RISER
48"	5"	4"
60"	5"	5"
72"	6"	6"

MATERIALS FOR BASE UNITS AND RISERS WILL COMPLY WITH GA. STANDARD SPECIFICATIONS FOR PRECAST MANHOLE SECTIONS.

D	MAX PIPE SIZE
48"	30"
60"	42"
72"	48"

REINF. STEEL OF WALL LAPED UNDER AND TIED TO BOTTOM SLAB REINF. BARS ALL AROUND.

REINF. STEEL BARS IN BOTTOM MAX. SPACING 12" C. TO C. BOTH WAYS.

D	BAR SIZE	NO.
48"	#5	8
60"	#5	10
72"	#6	12

SECTIONAL DETAIL

ALL REINF. BARS EXTENDED TO WITHIN 2" OF OUTSIDE OF BASE

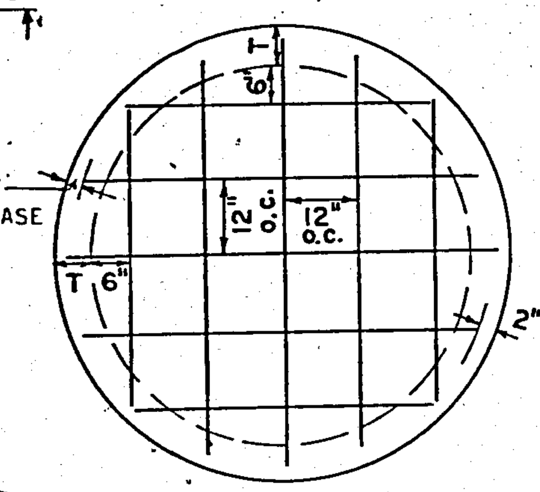

PLAN OF REINFORCING STEEL IN BOTTOM SLAB

CIRCULAR REDUCER SLAB

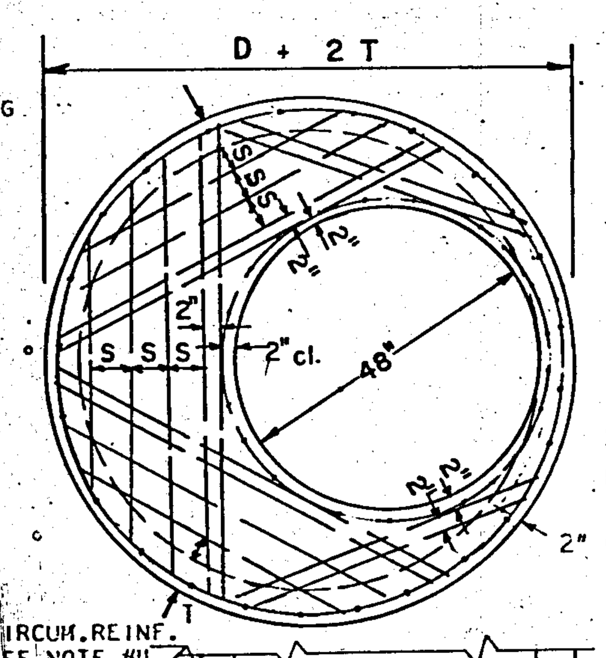

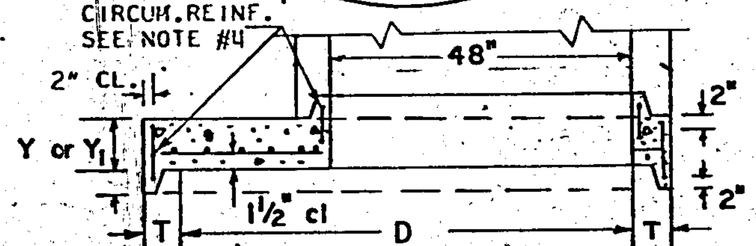

SECTIONAL DETAIL

LEAK PROOF CONNECTION ALL AROUND EACH PIPE

ADDITIONAL #5 VERTICAL BARS, TWO PER OPENING SPACED AS SHOWN.

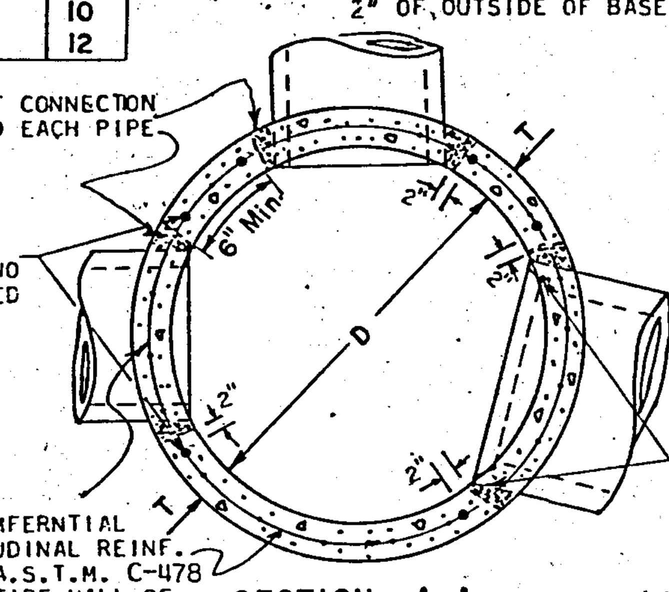

MIN. CIRCUMFERNTIAL AND LONGITUDINAL REINF. REQ'D. BY A.S.T.M. C-478 THROUGH ENTIRE WALL OF BASE.

SECTION A-A

OUTLET PIPE-SET BELL OR GROOVE FLUSH WITH CORNERS OR BEVEL CORNERS 2" TO IMPROVE HYDRAULIC EFFICIENCY.

CONTRACTOR SHALL PROVIDE FABRICATOR WITH PIPE SIZES AND ALIGNMENT

ADAPTER TYPE 2

FOR USE WITH CATCH BASINS

ADAPTER TYPE 2 MAY BE USED WITH DRAINAGE STRUCTURES OTHER THAN CATCH BASINS IF SO NOTED ON OTHER STANDARDS OR IN THE PLANS.
ADAPTER TYPE 3 WILL BE USED FOR STRUCTURES WHICH ARE UNDER TRAFFIC.

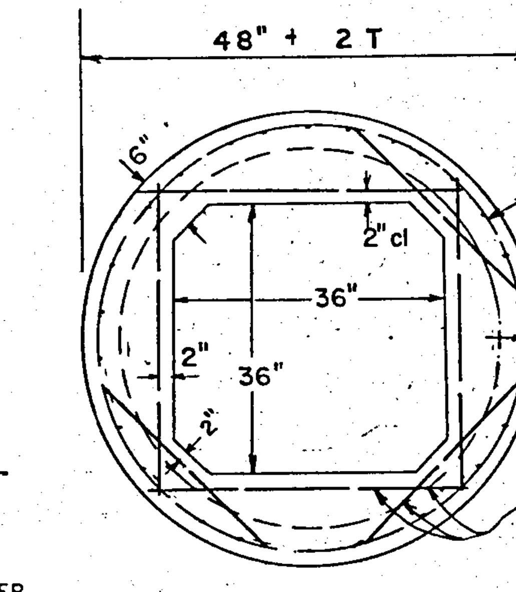

PLAN OF REINFORCING STEEL

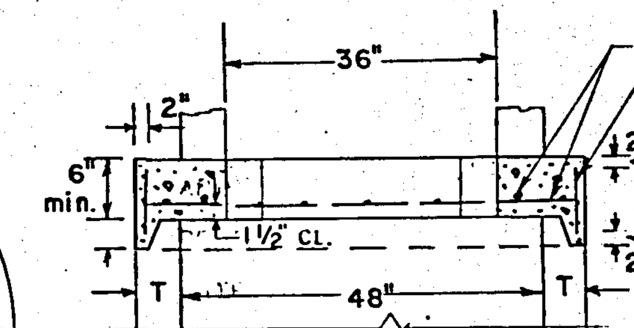

SECTIONAL DETAIL

ADAPTER TYPE 3

FOR USE WITH DROP INLETS

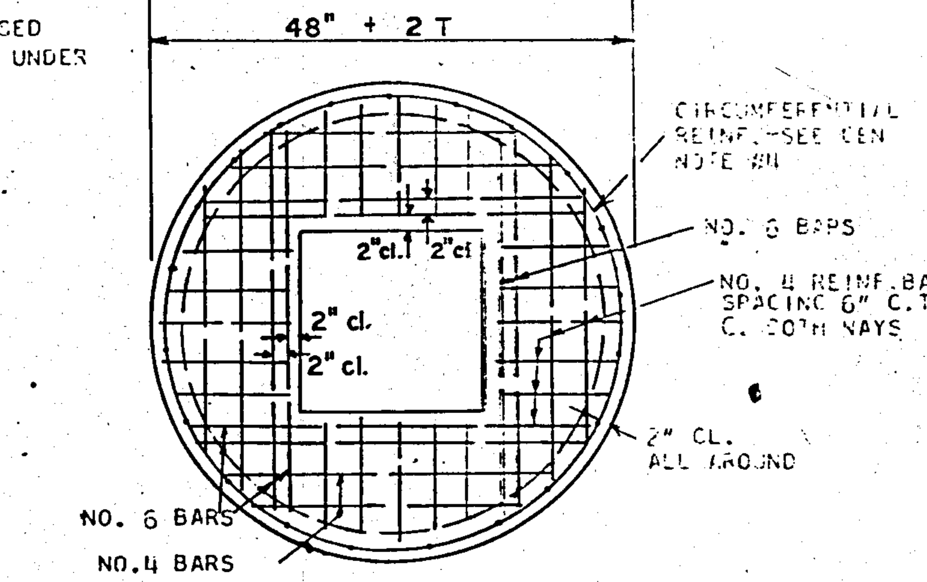

PLAN OF REINFORCING STEEL

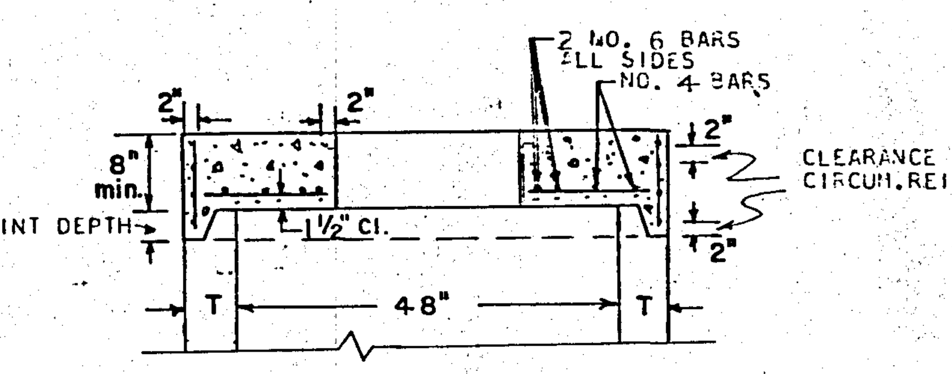

SECTIONAL DETAIL

NOTE: OPENING IN ADAPTER TYPE 3 DEPENDS UPON TYPE OF INLET. OPENING =1'5" x 2'0" FOR INLET TYPES A, B, C, OR D AND 2'0"x2'0" FOR INLET TYPE E (STANDARD 1019-A). FOR OTHER INLET TYPES, OPENING EQUAL TO OPENING REQUIRED FOR INLET WITH BOX TYPE BASES.

TYPICAL PLAN VEIWS OF CATCH BASINS

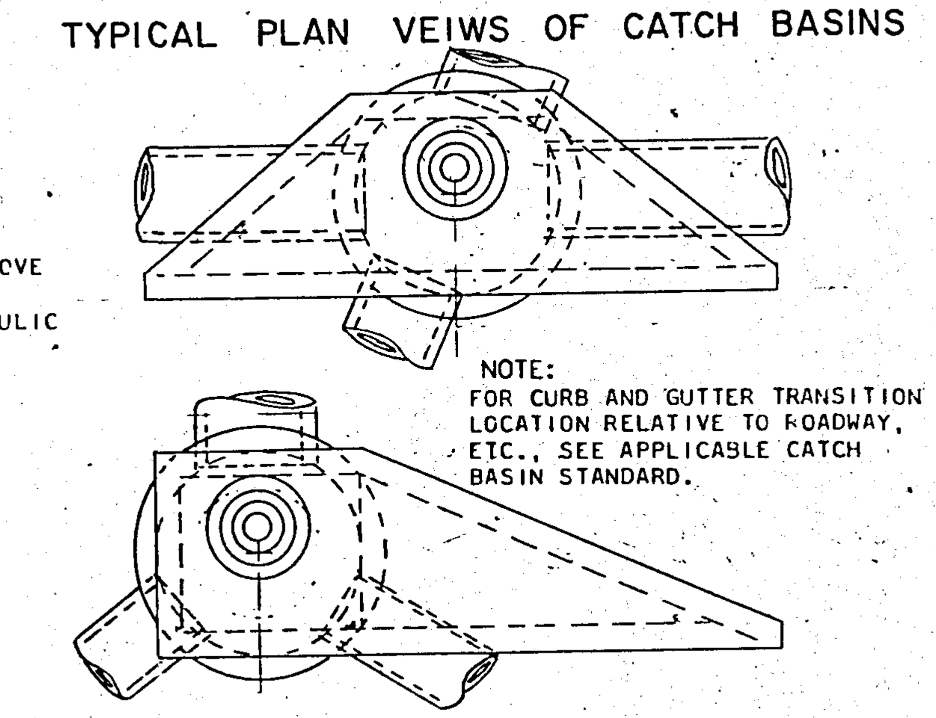

NOTE:
FOR CURB AND GUTTER TRANSITION LOCATION RELATIVE TO ROADWAY, ETC., SEE APPLICABLE CATCH BASIN STANDARD.

GENERAL NOTES:

1. MANHOLE STEPS OF TYPE APPROVED BY GA. D.O.T. MATERIALS LABORATORY OR SHOWN ON STDS. FOR PRECAST M.H. ARE REQUIRED IN ALL STRUCTURES WHERE H= OVER 4'0". NUMBER LOCATION, AND INSTALLATION TO BE DIRECTED BY THE ENGINEER
2. ALL CIRCULAR SECTIONS WILL HAVE TONGUE AND GROOVE TYPE JOINT IN COMPLIANCE WITH A.S.T.M. C-478.
3. ALL OPENINGS FOR PIPES OVER 8" IN DIAMETER MUST BE PRECAST.
4. ALL ADAPTERS AND REDUCER SLABS SHALL CONTAIN, IN ADDITION TO STEEL BAR REINF. SHOWN, CIRCUMFERENTIAL REINF. MIN. 0.12 SQ. IN./LIN.FT., GIVING ONE LINE OF CIRCUMFERENTIAL REINFORCEMENT IN LIP AND EXTENDING INTO BODY OF SLAB AS SHOWN.
5. FOR CONSTRUCTION ABOVE ADAPTER TYPE 2 AND TYPE 3 AND BELOW TYPE I, SEE APPLICABLE GA. STDS. FOR CATCH BASINS OR DROP INLETS.
6. CIRCULAR SECTIONS SHOWN ON THIS STANDARD MAY BE SUBSTITUTED FOR THE BOX TYPE BASE ON GA. STDS. AND CONSTRUCTION DETAILS FOR CATCH BASINS AND DROP INLETS, WHERE HEIGHT OF STRUCTURE, PIPE SIZE, AND ALIGNMENT PERMITS.
7. MINIMUM HEIGHT (H) FOR CIRCULAR CATCH BASINS = MIN. H_1 + MIN. H_2 + 6" (+Y_1 OR Y_2 IF REQUIRED) MINIMUM HEIGHT FOR CIRCULAR DROP INLETS = MIN. H_1 + MIN. H_3 + 11" (+ Y_1 OR Y_2 IF REQUIRED)

DROP INLET WITH CIRCULAR SECTIONS

TO BE USED WITH STANDARDS 1010, 1019-A, 9031-S, 9031-S PRECAST OR WITH DITCH D.I. CONSTRUCTION DETAILS.

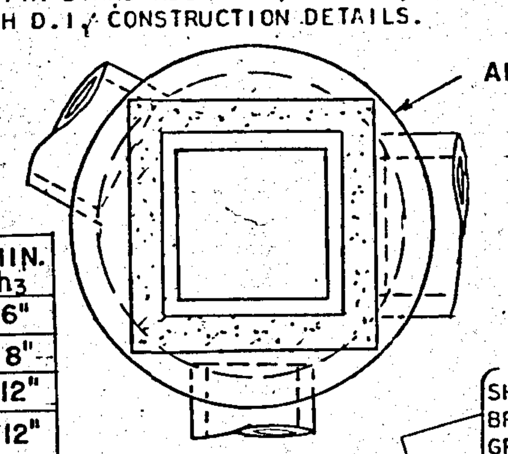

PLAN

INLET TYPE		MIN. h_3
STD. 1019A	A, B, or C	6"
	D	8"
	E	12"
STD. 1019 B TYPE V1 or V2		12"
9031S MED.		12"
DITCH D.I.		6"
STD. 1010-Ty"C"		8"

SHOWN HERE CONCRETE AND BRICK MASONRY ADJUSTMENT TO GRADE PER STANDARD 1019-A. FOR ACTUAL CONSTRUCTION ABOVE ADAPTER SEE APPLICABLE STANDARDS FOR DETAILS OF CONCRETE APRON, WEIR, HOOD, OR GRATE AS REQUIRED PER INLET TYPE.

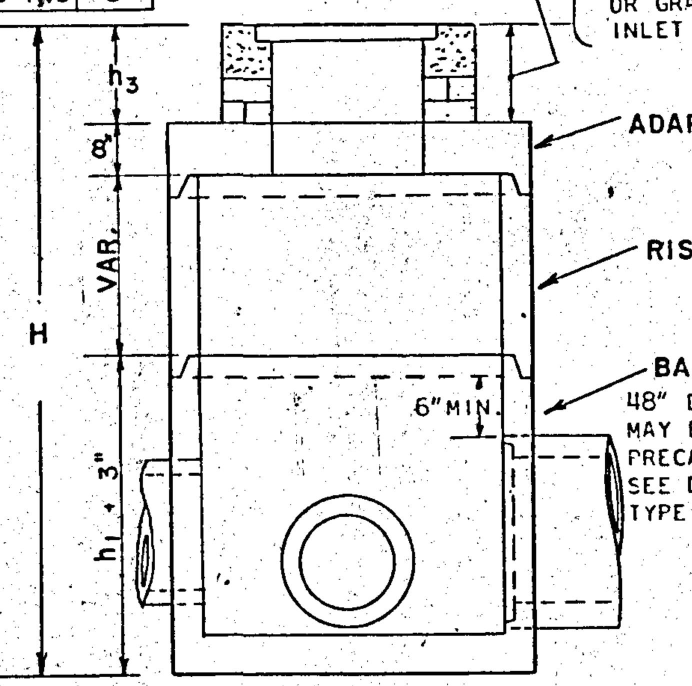

BASE - 48" DIA. PRECAST BASE SHOWN. MAY BE BUILT-IN-PLACE OR PRECAST. IF BASE IS OVER 48" SEE DETAILS AT TOP FOR ADAPTER TYPE I OR CIRCULAR REDUCER SLAB.

SECTIONAL VIEW

** TYPE 3 ADAPTER NOT REQUIRED FOR STD. 9031-S MEDIAN D.I. IF PRECAST APRON IS USED. SEE STANDARD 9031-S PRECAST.

BUILT-IN-PLACE CIRCULAR BASE

(BRICK MASONRY OR CLASS "A" CONCRETE)

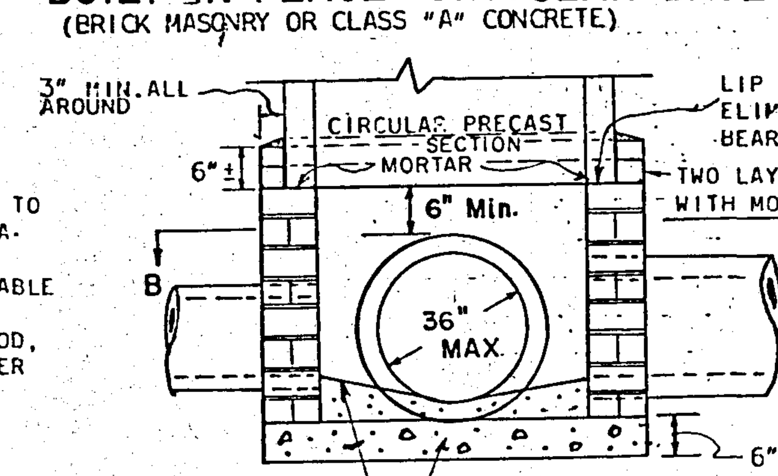

LIP OF PRECAST SECTION ELIMINATED TO GIVE MAX. BEARING SURFACE.

TWO LAYERS OF BRICK MASONRY WITH MORTAR BEVEL ALL AROUND.

BUILT-IN-PLACE CIRCULAR BASE SHALL SET FOR A MIN. OF 24 HOURS BEFORE PRECAST SECTIONS ARE PLACED.

6" FOR CATCH BASINS
8" FOR DROP INLETS

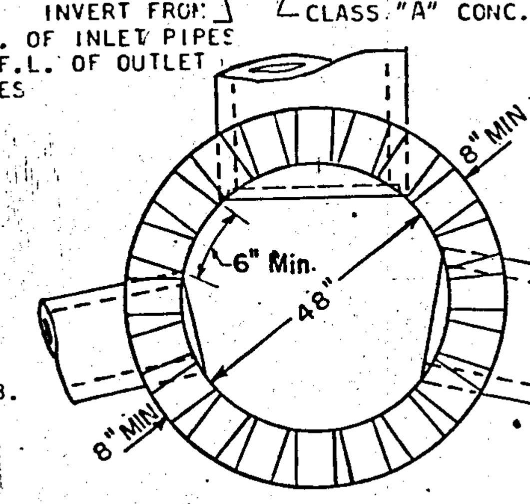

SECTION B-B

PIPE SIZE	MIN. h_1
12"	2'-3"
15"	2' 6"
18"	2' 9"
24"	3' 6"
30"	4'-0"
36"	4'-6"
42"	5'-3"
48"	5'-9"

CATCH BASIN WITH CIRCULAR SECTIONS

CONSTRUCTION ABOVE ADAPTER WILL BE EITHER PRECAST, BUILT-IN-PLACE OR A COMBINATION OF BOTH ACCORDING TO APPLICABLE CATCH BASIN STANDARDS.

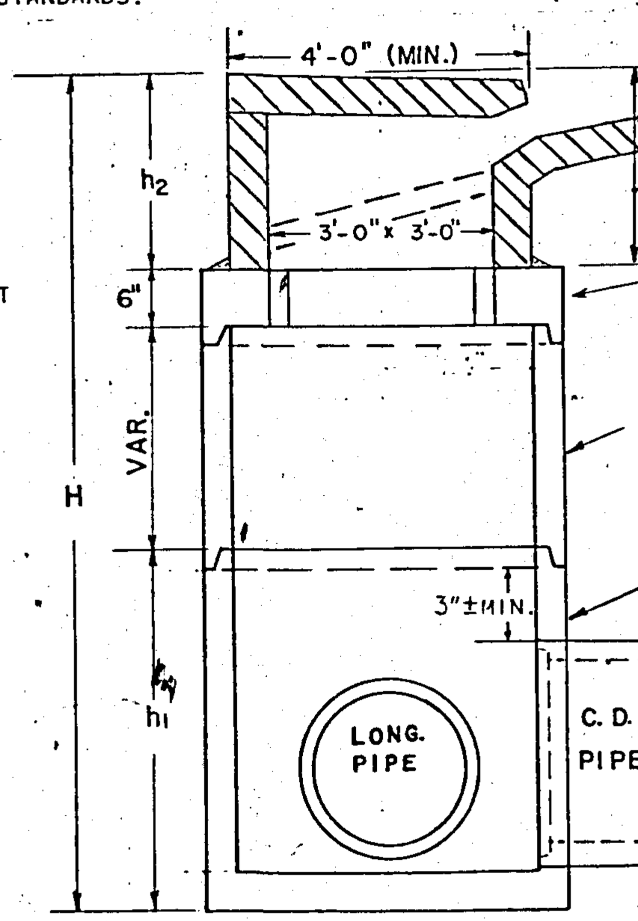

BASE - 48" DIA. PRECAST BASE SHOWN MAY BE BUILT-IN-PLACE OR PRECAST. IF BASE OVER 48", SEE DETAILS TOP LEFT FOR ADAPTER TYPE I OR CIRCULAR REDUCER SLAB.

SECTIONAL VIEW

DETAIL FOR CENTERING CIRCULAR SECTION OF CATCH BASINS BACK OF CURB

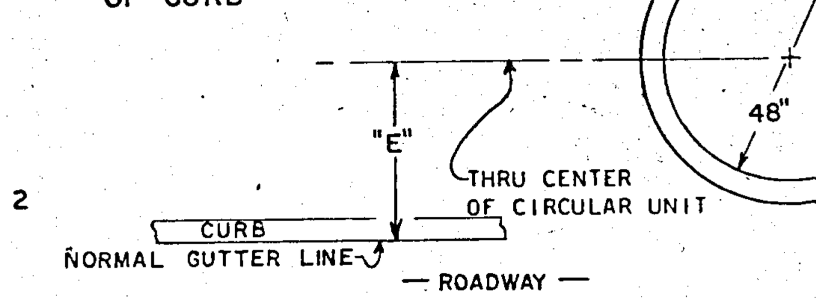

⊛ STD. No.	CURB HEIGHT	MIN. h_2	"E"
1033 D	6"	2'-0"	2'-0"
	8"	2'-2"	2'-0"
1033 E	4"	2'-0"	3'-0"
1033 F	4"	1'-11"	4'-0"
	6"	2'-1"	4'-0"
	8"	2'-1"	3'-0"
	10"	2'-1"	2'-0"
1034 D	6"	2'-1"	2'-0"
	8"	2'-2"	2'-0"
1034 E	4"	2'-0"	3'-0"
1034 F	4"	1'-11"	4'-0"
	6"	2'-1"	4'-0"
	8"	2'-1"	3'-0"
	10"	2'-1"	2'-0"

⊛ REFERENCED STANDARD MAY BE PRECAST OR BUILT-IN-PLACE.

REVISIONS	DATE	BY
GEN. REVISIONS	4-5-77	R.M.U.
ADD. REF. STD. 1019 B	8-24-79	R.M.U.

DEPARTMENT OF TRANSPORTATION
STATE OF GEORGIA

STANDARD

CIRCULAR BASE UNITS AND RISERS.
FOR CATCH BASINS AND DROP INLETS
TO BE USED WITH STANDARDS 1010, 1019-A, 1019 B, 1033 D, 1033 E, 1033-F, 1034-D, 1034-E, 1034-F, 9031-S (OR PRECAST STDS.) OR DROP INLET CONSTRUCTION DETAILS.

NO SCALE — MAY, 1975

DESIGNED RMU
DRAWN RMU
TRACED RMU
CHECKED RKC

SUMITTED [signature]
STATE ROAD & AIRPORT DESIGN ENGR.
APPROVED
STATE HIGHWAY ENGINEER

NUMBER 1040

Dietzgen N. D. 135 "Imperial"