STATE	PROJECT NUMBER	SHEET NO.	TOTAL SHEETS
GA.	EDF-017-3(39)	93	194.

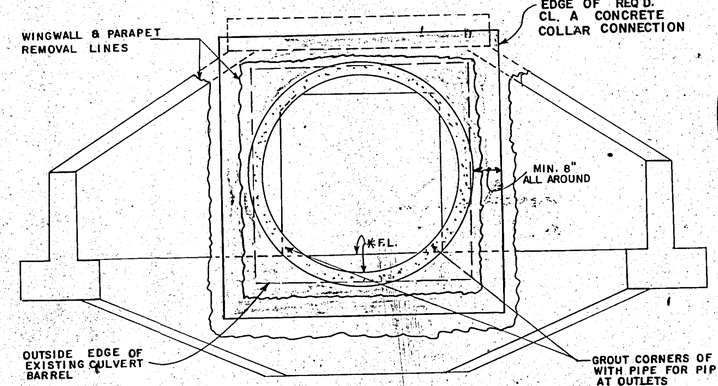

FRONT VIEW

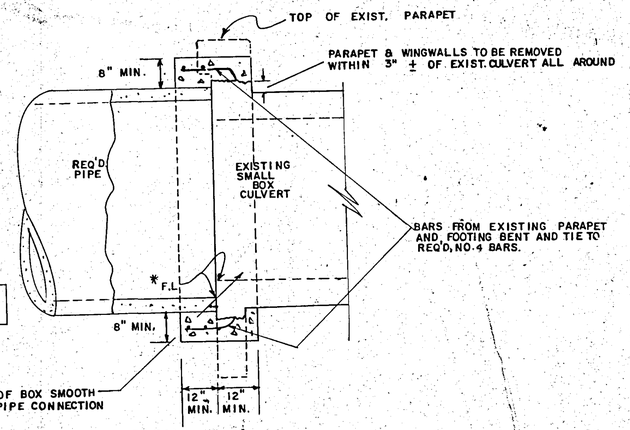

SECTION A-A

*FLOW LINES TO BE SHOWN IN THE PLANS. PIPE AND BOX CULVERT F.L. TO BE THE SAME FOR PIPE CONNECTION ON INLETS.

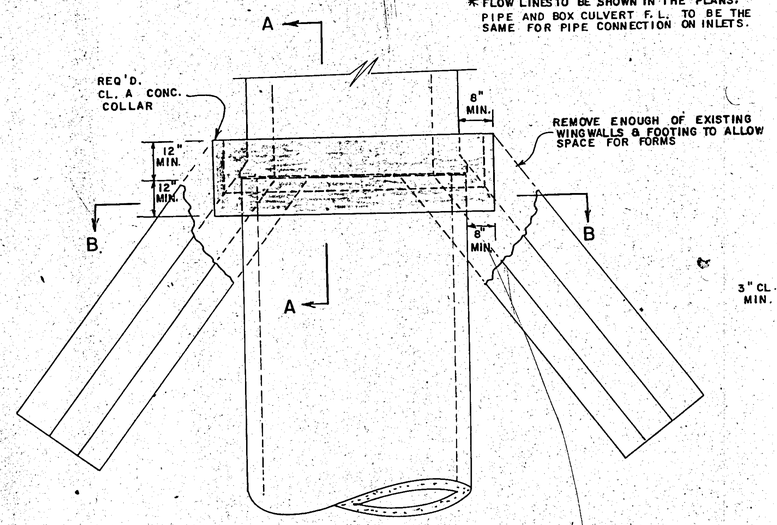

PLAN VIEW

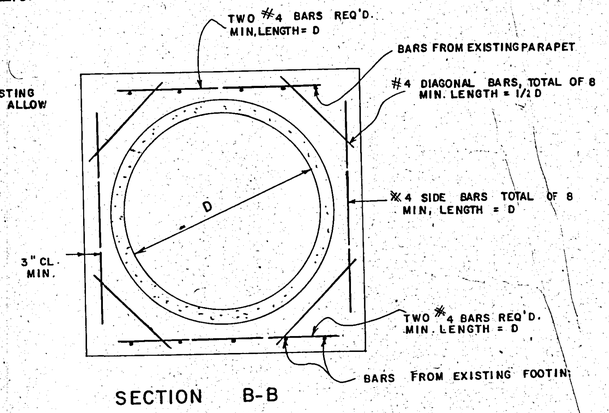

SECTION B-B

CONSTRUCTION DETAILS

CONCRETE COLLAR FOR PIPE TO BOX CULVERT CONNECTION

FORM EF00003