DETAILS OF RAISED PAVEMENT MARKERS

NO SCALE

STATE	PROJECT NUMBER	SHEET NO	TOTAL SHEETS
GA.	EDF-017-3(39)	66	194

TYPE 1

(EXAMPLE)

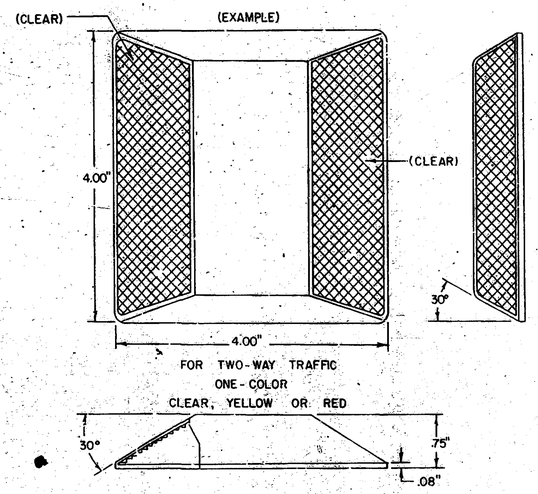

FOR TWO-WAY TRAFFIC
ONE-COLOR
CLEAR, YELLOW OR RED

TYPE 2

(EXAMPLE)

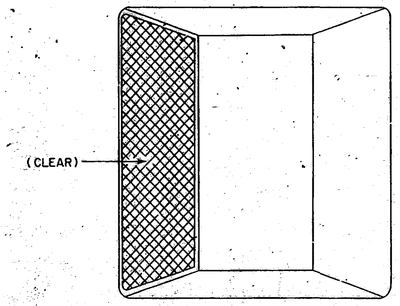

FOR ONE-WAY TRAFFIC
ONE-COLOR
CLEAR, YELLOW OR RED

TYPE 3

(EXAMPLE)

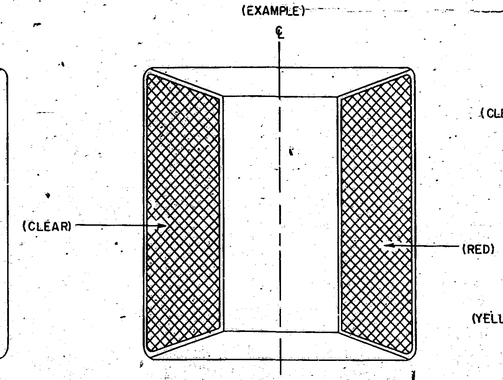

FOR ONE-WAY TRAFFIC
TWO-COLOR
ANY COMBINATION OF CLEAR, YELLOW OR RED

TYPE 4

(EXAMPLE)

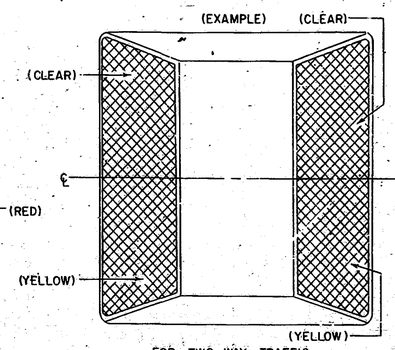

FOR TWO-WAY TRAFFIC
TWO-COLOR
ANY COMBINATION OF CLEAR, YELLOW OR RED

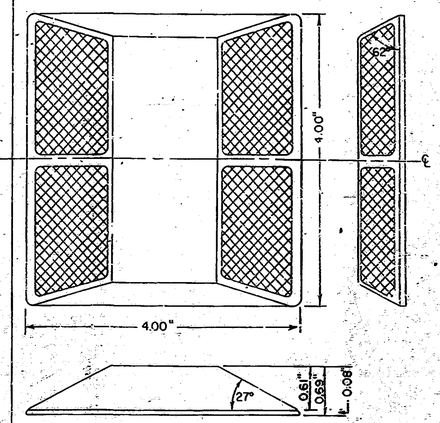

DETAIL OF ALTERNATE MARKER

Scale: Full Size

Note: Above marker may be used as an alternate to either type 1,2,3, or 4.

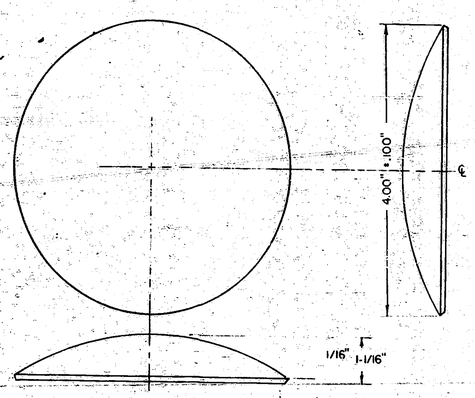

OPAQUE CERAMIC MARKER

TYPE 5 (WHITE) - TYPE 6 (YELLOW)

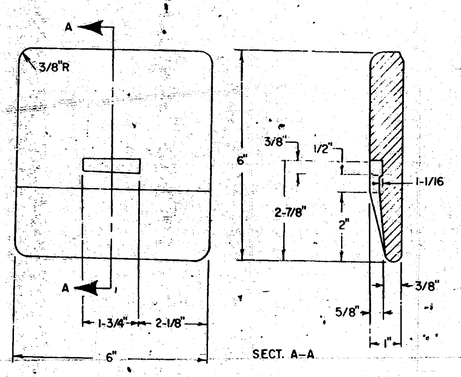

(REFLECTIVE)
TYPE 8 WHITE OR YELLOW

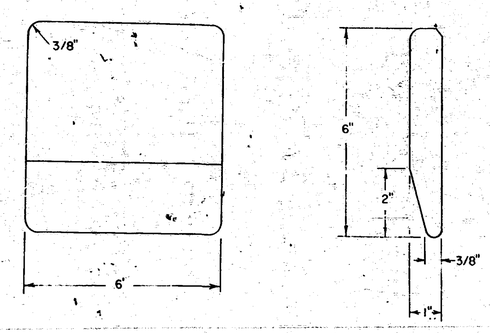

(NON-REFLECTIVE)
TYPE 7 WHITE OR YELLOW

CERAMIC JIGGLE BAR

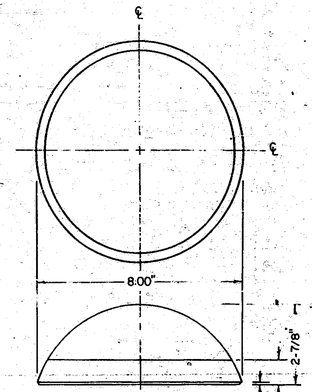

TYPE 9
(NON-REFLECTIVE)
WHITE OR YELLOW

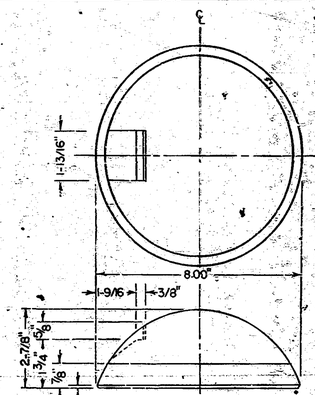

TYPE 10
(REFLECTIVE)
WHITE OR YELLOW

CERAMIC CHANNEL MARKER

RAISED REFLECTIVE AND NON-REFLECTIVE PAVEMENT MARKERS

GENERAL NOTES

1. SPECIFICATIONS SHALL BE PER THE SPECIAL PROVISIONS, OR AS SPECIFIED BELOW.
2. COLORS FOR REFLECTIVE ELEMENTS SHALL BE EITHER CLEAR, YELLOW OR RED AS SPECIFIED.
3. THE SHELL OF THE REFLECTIVE MARKERS SHALL BE OF ONE COLOR OR OF A COMBINATION OF TWO COLORS WHICH WILL BE THE SAME AS THE REFLECTIVE ELEMENT.
4. THE SURFACE OF OPAQUE CERAMIC MARKERS SHALL BE GLAZED AND OF THE COLOR SPECIFIED ON PLANS WITH A WHITE VITREOUS, CERAMIC BASE.
5. CERAMIC JIGGLE BARS SHALL BE FERRO CORP. PERMARK P-6, OR EQUAL. ADHESIVE USED SHALL BE PER MANUFACTURERS SPECIFICATIONS.
6. CERAMIC CHANNEL MARKERS, SHALL BE FERRO CORP. PERMARK P-18, OR EQUAL. ADHESIVE USED SHALL BE PER MANUFACTURER'S SPECIFICATIONS.
7. COLORS FOR CERAMIC CHANNEL MARKERS AND JIGGLE BARS SHALL BE AS SPECIFIED ON PLANS.

REDRAWN: 2-15-85