STATE	PROJECT NUMBER	SHEET NO.	TOTAL SHEETS
GA.	TSAP 193(9)	60	135

TYPE A WOOD POST

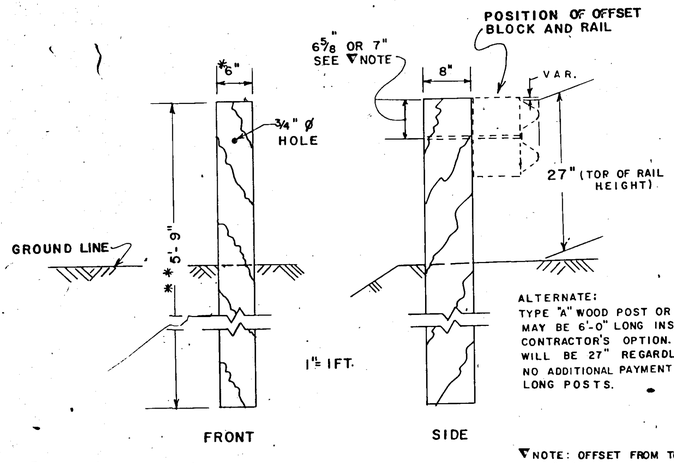

ALTERNATE:
TYPE "A" WOOD POST OR TYPE "D" STEEL POST MAY BE 6'-0" LONG INSTEAD OF 5'-9" AT CONTRACTOR'S OPTION. TOP OF RAIL HEIGHT WILL BE 27" REGARDLESS OF POST LENGTH. NO ADDITIONAL PAYMENT WILL BE MADE FOR 6'-0" LONG POSTS.

▼NOTE: OFFSET FROM TOP OF POST TO CENTER OF 3/4" ø HOLE(S) WILL BE DETERMINED BY LENGTH OF OFFSET BLOCK; I.E., 7" FOR 14" LENGTH BLOCKS AND 6 5/8" FOR 13 1/4" LENGTH BLOCKS.

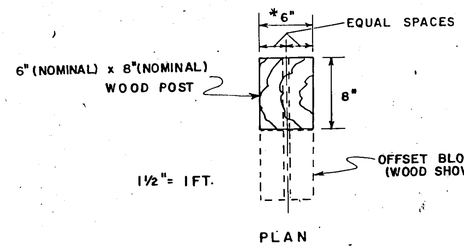

WOOD POSTS AND WOOD OFFSET BLOCKS MAY BE ROUGH OR SURFACED

DIMENSIONS FOR WOOD POSTS AND WOOD OFFSET BLOCKS ARE NOMINAL IN ACCORDANCE WITH ACCEPTED LUMBER INDUSTRY STANDARDS.

*WHERE POST SPACINGS ARE LESS THAN 6'-3" C.TO C. AND WOOD POSTS ARE USED, ALL POSTS SET AT THE REDUCED SPACINGS PLUS A MINIMUM OF TWO POSTS IN ADVANCE OF THE FIRST REDUCED SPACE WILL BE 8"x 8" (NOMINAL) INSTEAD OF 6"x 8"

TYPE D STEEL POST

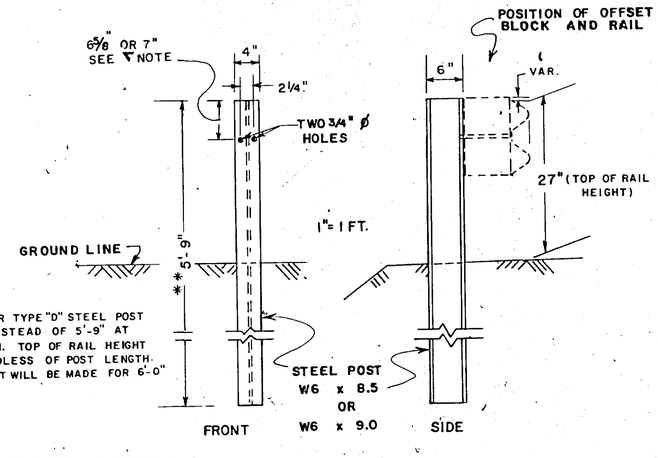

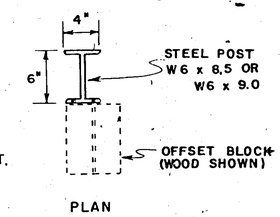

** WHERE POSTS ARE PLACED BACK OF THE SLOPE BREAKPOINT IN SLOPES STEEPER THAN 4:1, 6'-6" POSTS SHALL BE USED IN LIEU OF 5'-9" POSTS, UNLESS OTHERWISE NOTED. IF THE 6'-6" LONG POSTS ARE CONCRETE POSTS, THE NO. 4 BARS SHALL BE 6'-3" LONG WITH ONE ADDITIONAL 3 Ga. STIRRUP AT A SPACING OF 9" BETWEEN THE 7" & 12" SPACING SHOWN.

TYPE F CONCRETE POST

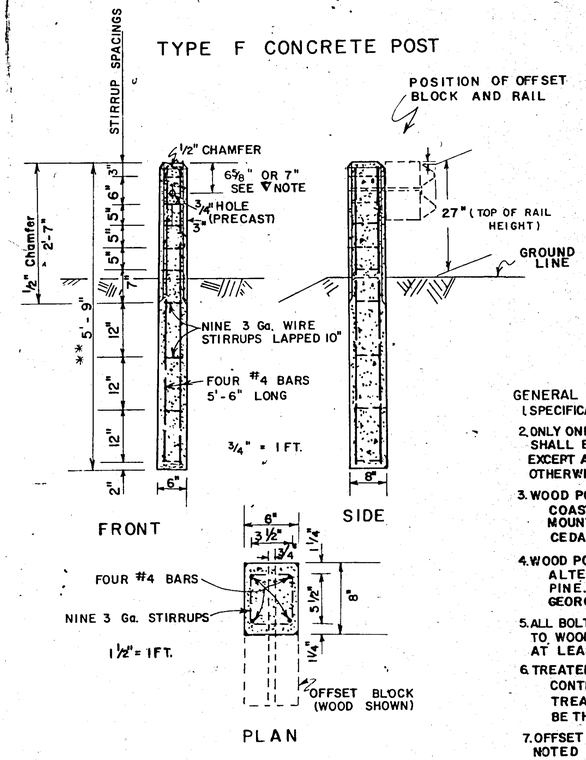

GENERAL NOTES:

1. SPECIFICATIONS: GEORGIA STANDARD AND/OR SPECIAL PROVISIONS.
2. ONLY ONE TYPE POST AND ONLY ONE TYPE OFFSET BLOCK SHALL BE USED FOR ANY RUN OF "W" BEAM GUARDRAIL, EXCEPT AT SHALLOW FILLS OVER CULVERTS, OR WHERE NOTED OTHERWISE ON PLANS.
3. WOOD POSTS (UNTREATED) - COASTAL REGION ALTERNATES: CYPRESS AND RED CEDAR. MOUNTAIN REGION ALTERNATES: BLACK LOCUST AND RED CEDAR.
4. WOOD POSTS (TREATED) - ALTERNATES: SOUTHERN PINE OR SOUTHERN LONGLEAF PINE. POSTS TO BE TREATED IN ACCORDANCE WITH GEORGIA STANDARD SPECIFICATIONS.
5. ALL BOLTS USED FOR FASTENING THE RAIL AND OFFSET BLOCKS TO WOOD POSTS SHALL HAVE SUFFICIENT LENGTH TO EXTEND AT LEAST 1/4" BEYOND THE FULL NUT.
6. TREATED WOOD OFFSET BLOCKS: CONTROLS AS TO QUALITY, SEASONING AND PERSERVATIVE TREATMENT OF TREATED WOOD OFFSET BLOCKS SHALL BE THE SAME AS FOR WOOD POSTS.
7. OFFSET BLOCKS WILL BE REQUIRED AT ALL POSTS, UNLESS NOTED OTHERWISE. BLOCKS WILL BE ATTACHED WITH BOLTS, NUTS AND WASHERS ACCORDING TO STANDARD 4010.
8. POSTS WILL BE ERRECTED AT A HEIGHT, WHICH WILL GIVE A TOP OF RAIL HEIGHT OF 27".
9. POSTS WILL BE SPACED AT 6'-3" C. TO C., UNLESS OTHERWISE NOTED.
10. DETAILS, DIMENSIONS, NOTES, OR SPECIFICATIONS NOT SHOWN HERE, ON OTHER STANDARDS, IN THE PLANS, OR IN THE GA. STANDARD SPECIFICATIONS OR SPECIAL PROVISIONS WILL BE ACCORDING TO THE CURRENT ARTBA TECHNICAL BULLETIN NO. 268.

BACK-UP PLATE

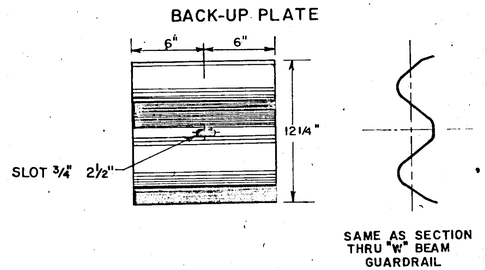

WOOD OFFSET BLOCK

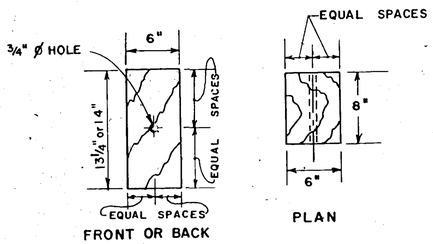

STEEL OFFSET BLOCK

W6 x 8.5 OR W6 x 9.0

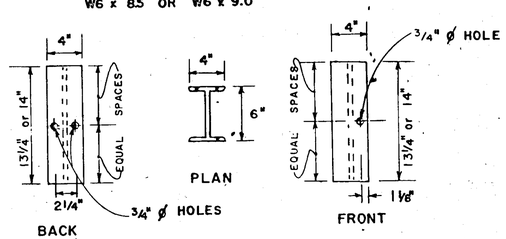

BACK-UP PLATE SHOWN ABOVE SHALL BE REQUIRED WITH STEEL OFFSET BLOCKS, EXCEPT AT RAIL SPLICES.

(NOTICE TO SUPPLIERS — 13- 1/4" LENGTH OFFSET BLOCKS ARE BEING ALLOWED FOR AN INDEFINITE PERIOD TO EXHAUST EXISTING SUPPLIES. FUTURE REVISIONS OF THIS STANDARD WILL SHOW ONLY THE 14" LENGTH.)

CONCRETE FOUNDATION FOR PLACING TYPE D STEEL POST OR TYPE F CONCRETE POST IN SHALLOW FILLS OVER CULVERTS OR OTHER OBSTRUCTIONS.

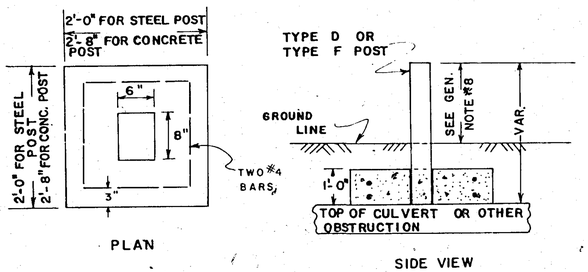

6" x 8" OPENING TO BE OMITTED WHEN STEEL POST IS USED. BOTTOM OF CONC. POST TO BE WRAPPED WITH TWO LAYERS OF 3-PLY TAR PAPER TO BREAK BOND.

STEEL POST TO BE PLUMBED AND FOUNDATION CONCRETE POURED ABOUT SAME TO FINISHED ELEVATION. OMIT TAR PAPER.

PAYMENT FOR GUARDRAIL TO INCLUDE ALL EXTRA WORK AND MATERIALS, INCLUDING CLASS "B" CONCRETE AND NO. 4 BARS.

FOUNDATION TO BE CLASS "B" CONCRETE.

OUTSIDE DIMENSIONS OF FOOTING ARE MINIMUM.

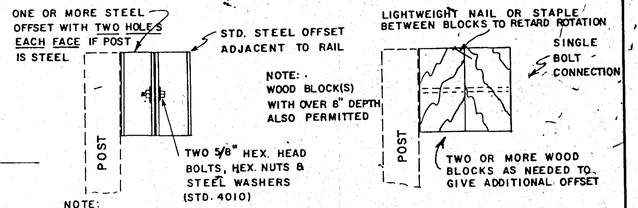

NOTE:
FOR BLOCK CONNECTION TO POST AND TO RAIL SEE STD. 4010.

ADDITIONAL DEPTH OFFSET ALTERNATES
(FOR USE WHERE GREATER THAN STANDARD OFFSET IS SPECIFIED)

REVISIONS	DATE
BLOCK DIM. & NOTE 10	7-1-80

BY
R.M.U.

DEPARTMENT OF TRANSPORTATION
STATE OF GEORGIA

STANDARD POSTS AND OFFSET BLOCKS FOR "W" BEAM GUARDRAIL

SCALE AS SHOWN. REV. & REDRAWN - OCT, 1978

DES. DWN. R.M.U. TRA. G.M.E. CKD. R.K.C.

(SUBMITTED) Wendell Hunter
STATE ROAD & AIRPORT DESIGN ENGR.
(APPROVED) Thomas D. Moreland
STATE HIGHWAY ENGINEER

NUMBER 4011

FORM EF3