STATE	PROJECT NUMBER	SHEET No	TOTAL SHEETS
GA.	TSAP-193(9)	57	135

DIMENSIONS - WINGS AND PARAPETS

SAME FOR ALL DEPTHS OF FILL

75° SKEW — WING A (E BARS ½"Φ AT 12" C. TO C.; F BARS ½"Φ AT 12" C. TO C.) — PARAPET (K - ½"Φ)

CLEAR SPAN	CLEAR HEIGHT		E	E	E	E	E	E	E	F	F	F	F	F	K SINGLE	K DOUBLE	K TRIPLE
4'	5'	NUMBER	4	4	4	4	4	4	2	8	2	2	2	2	4		
		LENGTH	8'-3"	7'-7"	7'-0"	6'-4"	5'-8"	5'-0"	4'-9"	11'-10"	10'-9"	7'-7"	4'-5"	2'-3"	6'-9"		
3'	2'	NUMBER	4	4	4	2				6	2	2			4		
		LENGTH	5-3	4-7	3-10	3-6				6-4	4-3	2-3			5-9		
	2'-6"	NUMBER	4	4	4	4				6	2	2			4	4	4
		LENGTH	5-9	5-2	4-6	3-10				7-7	6-3	3-1			5-9	9-5	13-1
	3'	NUMBER	4	4	4	4	2			6	2	2	2		4	4	4
		LENGTH	6-3	5-8	5-1	4-5	4-1			8-7	7-11	4-9	2-3		5-9	9-5	13-1
4'	2'-6"	NUMBER	4	4	4	4				6	2	2			4	4	4
		LENGTH	5-9	5-2	4-6	3-10				7-7	6-3	3-1			6-9	11-5	16-1
	3'	NUMBER	4	4	4	4	2			6	2	2	2		4	4	4
		LENGTH	6-3	5-8	5-1	4-5	4-1			8-7	7-11	4-9	2-3		6-9	11-5	16-1
	4'	NUMBER	4	4	4	4	4	2		8	2	2	2		4	4	4
		LENGTH	7-3	6-8	6-0	5-4	4-8	4-4		10-1	7-8	4-7	2-3		6-9	11-7	16-5
5'	2'-6"	NUMBER	4	4	4	4				6	2	2			4	4	4
		LENGTH	5-9	5-2	4-6	3-10				7-7	6-3	3-1			7-9	13-5	19-1
	3'	NUMBER	4	4	4	4	2			6	2	2	2		4	4	4
		LENGTH	6-3	5-8	5-1	4-5	4-1			8-7	7-11	4-9	2-3		7-9	13-5	19-1
	4'	NUMBER	4	4	4	4	4	2		8	2	2	2		4	4	4
		LENGTH	7-3	6-8	6-0	5-4	4-8	4-4		10-1	7-8	4-7	2-3		7-9	13-7	19-5
	5'	NUMBER	4	4	4	4	4	4	2	8	2	2	2	2	4	4	4
		LENGTH	8-3	7-7	7-0	6-4	5-8	5-0	4-9	11-10	10-9	7-7	4-6	2-3	7-9	13-7	19-5
6'	3'	NUMBER	4	4	4	4	2			6	2	2	2		4	4	4
		LENGTH	6-3	5-8	5-1	4-5	4-1			8-7	7-11	4-9	2-3		8-9	15-7	22-5
	4'	NUMBER	4	4	4	4	4	2		8	2	2	2		4	4	4
		LENGTH	7-3	6-8	6-0	5-4	4-8	4-4		10-1	7-8	4-7	2-3		8-9	15-7	22-7
	5'	NUMBER	4	4	4	4	4	4	2	8	2	2	2	2	4	4	4
		LENGTH	8-3	7-7	7-0	6-4	5-8	5-0	4-9	11-10	10-9	7-7	4-6	2-3	8-9	15-9	22-9
	6'	NUMBER	4	4	4	4	4	4	4	10	2	2	2	2	4	[illegible]	4
		LENGTH	9-4	8-8	8-0	7-4	6-8	6-0	5-4	13-7	10-8	7-9	4-10	2-3	8-9	15-9	22-9

60° SKEW — WING B (E BARS ½"Φ AT 12" C. TO C.; F BARS ½"Φ AT 12" C. TO C.) — PARAPET (K - ½"Φ; L - ⅝"Φ)

CLEAR SPAN	CLEAR HEIGHT		E	E	E	E	E	E	E	E	E	F	F	F	F	F	F	F	K SINGLE	K DOUBLE	K TRIPLE	L SINGLE	L DOUBLE	L TRIPLE
4'	5'	NUMBER	4	4	4	4	4	4	4	2		6	2	2	2	2	2		4			6		
		LENGTH	8'-3"	7'-8"	6'-11"	6'-3"	5'-7"	4'-11"	4'-3"	3'-11"		14'-7"	13'-4"	10'-4"	7'-5"	4'-6"	2'-3"		7'-6"			6'-2"		
3'	2'	NUMBER	4	4	4	4						4	2	2	2				4			4		
		LENGTH	5-3	4-6	3-9	3-0						7-7	6-8	4-1	2-3				6-0			4-8		
	2'-6"	NUMBER	4	4	4	4	4					4	2	2	2				4	4	4	4	4	4
		LENGTH	5-9	5-1	4-4	3-8	2-11					9-1	8-6	5-7	2-10				6-0	10-0	14-2	4-8	8-8	12-9
	3'	NUMBER	4	4	4	4	4	2				6	2	2	2				4	4	4	4	4	4
		LENGTH	6-3	5-7	4-11	4-3	3-6	3-2				10-1	7-3	4-4	2-3				6-0	10-0	14-2	4-8	8-8	12-9
4'	2'-6"	NUMBER	4	4	4	4	4					4	2	2	2				4	4	4	6	6	6
		LENGTH	5-9	5-1	4-4	3-8	2-11					9-1	8-6	5-7	2-10				7-4	12-6	17-8	6-0	11-2	16-4
	3'	NUMBER	4	4	4	4	4	2				6	2	2	2				4	4	4	6	6	6
		LENGTH	6-3	5-7	4-11	4-3	3-6	3-2				10-1	7-3	4-4	2-3				7-4	12-6	17-8	6-0	11-2	16-4
	4'	NUMBER	4	4	4	4	4	4	2			6	2	2	2	2			4	4	4	6	6	6
		LENGTH	7-3	6-7	5-11	5-2	4-6	3-10	3-5			12-1	10-0	7-2	4-3	2-3			7-6	12-10	18-4	6-2	11-7	16-11
5'	2'-6"	NUMBER	4	4	4	4	4					4	2	2	2				4	4	4	8	8	8
		LENGTH	5-9	5-1	4-4	3-8	2-11					9-1	8-6	5-7	2-10				8-4	14-8	21-0	7-1	13-5	19-9
	3'	NUMBER	4	4	4	4	4	2				6	2	2	2				4	4	4	8	8	8
		LENGTH	6-3	5-2	4-11	4-3	3-6	3-2				10-1	7-3	4-4	2-3				8-4	14-8	21-0	7-1	13-5	19-9
	4'	NUMBER	4	4	4	4	4	4	2			6	2	2	2	2			4	4	4	8	8	8
		LENGTH	7-3	6-7	5-11	5-2	4-6	3-10	3-5			12-1	10-0	7-2	4-3	2-3			8-6	15-0	21-8	7-4	13-10	20-4
	5'	NUMBER	4	4	4	4	4	4	4	2		6	2	2	2	2	2		4	4	4	8	8	8
		LENGTH	8-3	7-8	6-11	6-3	5-7	4-11	4-3	[illegible]		14-7	13-4	10-4	7-5	4-6	2-3		8-6	15-0	21-8	7-4	13-10	20-4
6'	3'	NUMBER	4	4	4	4	4	2				6	2	2	2				4	4	4	10	10	10
		LENGTH	6-3	5-7	4-11	4-3	3-6	3-2				10-1	7-3	4-4	2-3				9-7	17-3	24-9	8-2	15-9	23-4
	4'	NUMBER	4	4	4	4	4	4	2			6	2	2	2	2			4	4	4	10	10	10
		LENGTH	7-3	6-7	5-11	5-2	4-6	3-10	3-5			12-1	10-0	7-2	4-3	2-3			9-7	17-4	25-2	8-4	16-0	23-8
	5'	NUMBER	4	4	4	4	4	4	4	2		6	2	2	2	2	2		4	4	4	10	10	10
		LENGTH	8-3	7-8	6-11	6-3	5-7	4-11	4-3	3-11		14-7	13-4	10-4	7-5	4-6	2-3		9-9	17-7	25-5	8-6	16-4	24-1
	6'	NUMBER	4	4	4	4	4	4	4	4	2	6	2	2	2	2	2	2	4	4	4	10	10	10
		LENGTH	9-3	8-8	8-0	7-3	6-7	5-11	5-2	4-6	4-2	16-7	16-0	13-2	10-3	7-5	4-6	2-3	9-9	17-7	25-5	6-6	16-4	24-1

45° SKEW — WING C (E BARS ½"Φ AT 12" C. TO C.; F BARS ½"Φ AT 12" C. TO C.) — PARAPET (K - ½"Φ; L - ⅝"Φ)

CLEAR SPAN	CLEAR HEIGHT		E	E	E	E	E	E	E	E	E	E	E	F	F	F	F	F	F	K SINGLE	K DOUBLE	K TRIPLE	L SINGLE	L DOUBLE	L TRIPLE
4'	5'	NUMBER	4	4	4	4	4	4	4	4	4	4		8	2	2	2	2		4			8		
		LENGTH	8'-3"	8'-0"	7'-6"	7'-3"	6'-7"	6'-1"	5'-8"	5'-2"	4'-9"	4'-3"		19'-4"	15'-3"	10'-10"	6'-6"	2'-4"		9'-10"			7'-6"		
3'	2'	NUMBER	4	4	4	4	4	4						4	2	2	2			4			6		
		LENGTH	5-3	5-0	4-6	4-0	3-5	3-0						10-10	10-4	6-4	2-4			8-2			5-10		
	2'-6"	NUMBER	4	4	4	4	4	4	2					6	2	2				4	4	4	6	6	6
		LENGTH	5-9	5-6	5-0	4-7	4-1	3-7	3-5					12-4	8-9	4-5				8-2	13-2	18-0	5-10	10-9	15-9
	3'	NUMBER	4	4	4	4	4	4	4	2				6	2	2	2			4	4	4	6	6	6
		LENGTH	6-3	6-0	5-6	5-1	4-7	4-2	3-8	3-6				13-10	11-1	6-9	2-5			8-2	13-2	18-0	5-10	10-9	15-9
4'	2'-6"	NUMBER	4	4	4	4	4	4	2					6	2	2				4	4	4	8	8	8
		LENGTH	5-9	5-6	5-0	4-7	4-1	3-7	3-5					12-4	8-9	4-5				9-7	15-11	22-3	7-2	13-6	19-10
	3'	NUMBER	4	4	4	4	4	4	4	2				6	2	2	2			4	4	4	8	8	8
		LENGTH	6-3	6-0	5-6	5-1	4-7	4-2	3-8	3-6				13-10	11-1	6-9	2-5			9-7	15-11	22-3	7-2	13-6	19-10
	4'	NUMBER	4	4	4	4	4	4	4	4	2			6	2	2	2	2		4	4	4	8	8	8
		LENGTH	7-3	7-0	6-6	6-1	5-7	5-1	4-8	4-2	3-11			16-4	15-1	10-10	6-7	2-5		9-10	16-2	23-0	7-6	14-1	21-8
5'	2'-6"	NUMBER	4	4	4	4	4	4	2					6	2	2				4	4	4	10	10	10
		LENGTH	5-9	5-6	5-0	4-7	4-1	3-7	3-5					12-4	8-9	4-5				10-11	18-9	26-5	8-8	16-5	24-2
	3'	NUMBER	4	4	4	4	4	4	4	2				6	2	2	2			4	4	4	10	10	10
		LENGTH	6-3	6-0	5-6	5-1	4-7	4-2	3-8	3-6				13-10	11-1	6-9	2-5			10-11	18-9	26-5	8-8	16-5	24-2
	4'	NUMBER	4	4	4	4	4	4	4	4	2			6	2	2	2	2		4	4	4	10	10	10
		LENGTH	7-3	7-0	6-6	6-1	5-7	5-1	4-8	4-2	3-11			16-4	15-1	10-10	6-7	2-5		11-2	19-2	27-2	8-10	16-10	24-10
	5'	NUMBER	4	4	4	4	4	4	4	4	4	4		8	2	2	2	2		4	4	4	10	10	10
		LENGTH	8-3	8-0	7-6	7-3	6-7	6-1	5-8	5-2	4-9	4-3		19-4	15-3	10-10	6-8	2-4		11-2	19-2	27-2	8-10	16-10	24-10
6'	3'	NUMBER	4	4	4	4	4	4	4	2				6	2	2	2			4	4	4	12	12	12
		LENGTH	6-3	6-0	5-6	5-1	4-7	4-2	3-8	3-6				13-10	11-1	6-9	2-5			12-7	21-11	31-3	10-0	19-4	28-7
	4'	NUMBER	4	4	4	4	4	4	4	4	2			6	2	2	2	2		4	4	4	12	12	12
		LENGTH	7-3	7-0	6-6	6-1	5-7	5-1	4-8	4-2	3-11			16-4	15-1	10-10	6-7	2-5		12-8	12-2	31-4	10-2	19-7	29-0
	5'	NUMBER	4	4	4	4	4	4	4	4	4	4		8	2	2	2	2		4	4	4	12	12	12
		LENGTH	8-3	8-0	7-6	7-3	6-7	6-1	5-8	5-2	4-9	4-3		19-4	15-3	10-10	6-8	2-4		12-10	22-4	31-10	10-4	19-10	29-5
	6'	NUMBER	8	4	4	4	4	4	4	4	4	4	4	8	2	2	2	2	2	4	4	4	12	12	12
		LENGTH	9-4	9-1	8-7	8-2	7-7	7-1	6-8	6-2	5-8	5-2	4-8	21-10	19-3	15-0	10-11	6-4	2-6	12-10	22-4	31-10	10-4	19-10	29-5

ALL ANGLES OF SKEW — WING D (E BARS ½"Φ AT 12" C. TO C.; F BARS ½"Φ AT 12" C. TO C.)

CLEAR SPAN	CLEAR HEIGHT		E	E	E	E	E	E	F	F	F	F	F
4' ⚠2	5'	NUMBER	4	4	4	4	4		8	2	2	2	2
		LENGTH	8'-2"	7'-4"	6'-7"	5'-9"	5'-0"		9'-1"	8'-8"	6'-2"	3'-8"	2'-3"
3'	2'	NUMBER	4	4	2				6	2	2		
		LENGTH	5-1	4-3	3-10				4-8	3-3	2-3		
	2'-6"	NUMBER	4	4	4				6	2	2		
		LENGTH	5-7	4-10	4-0				5-8	4-10	2-3		
	3'	NUMBER	4	4	4	2			6	2	2	2	
		LENGTH	6-1	5-4	4-7	4-2			6-5	6-2	3-7	2-3	
4'	2'-6"	NUMBER	4	4	4				6	2	2		
		LENGTH	5-7	4-10	4-0				5-8	4-10	2-3		
	3'	NUMBER	4	4	4	2			6	2	2	2	
		LENGTH	6-1	5-4	4-7	4-2			6-5	6-2	3-7	2-3	
	4'	NUMBER	4	4	4	4			8	2	2	2	
		LENGTH	7-1	6-4	5-6	4-9			7-8	6-0	3-6	2-3	
5'	2'-6"	NUMBER	4	4	4				6	2	2		
		LENGTH	5-7	4-10	4-0				5-8	4-10	2-3		
	3'	NUMBER	4	4	4	2			6	2	2	2	
		LENGTH	6-1	5-4	4-7	4-2			6-5	6-2	3-7	2-3	
	4'	NUMBER	4	4	4	4			8	2	2	2	
		LENGTH	7-1	6-4	5-6	4-9			7-8	6-0	3-6	2-3	
	5'	NUMBER	4	4	4	4	4		8	2	2	2	2
		LENGTH	8-2	7-4	6-7	5-9	5-0		9-1	8-8	6-2	3-8	2-3
6'	3'	NUMBER	4	4	4	2			6	2	2	2	
		LENGTH	6-1	5-4	4-7	4-2			6-5	6-2	3-7	2-3	
	4'	NUMBER	4	4	4	4			8	2	2	2	
		LENGTH	7-1	6-4	5-6	4-9			7-8	6-0	3-6	2-3	
	5'	NUMBER	4	4	4	4	4		8	2	2	2	2
		LENGTH	8-2	7-4	6-7	5-9	5-0		9-1	8-8	6-2	3-8	2-3
	6'	NUMBER	4	4	4	4	4	2	10	2	2	2	2
		LENGTH	9-2	8-5	7-8	6-10	6-1	5-8	10-5	8-11	6-5	3-9	2-3

DIMENSIONS - WINGS AND PARAPETS

SAME FOR ALL DEPTHS OF FILL

CLEAR SPAN	CLEAR HEIGHT	SINGLES-DOUBLES-TRIPLES 75° SKEW M	W2	Z	60° SKEW M	W2	Z	45° SKEW M	W2	Z	SINGLES 75° R1	R2	60° R1	R2	45° R1	R2	DOUBLES 75° R1	R2	60° R1	R2	45° R1	R2	TRIPLES 75° R1	R2	60° R1	R2	45° R1	R2	FOR ALL SKEWS N	W4	H	CLEAR HEIGHT	CLEAR SPAN
4'	5'	10'-9"	2'-6"	1'-3"	13'-6"	1'-5"	1'-5"	17'-6"	1'-11"	1'-6"	3'-9"	3'-4"	4'-0"	3'-10"	5'-3"	4'-11"													8'-6"	2'-9"	SAME AS SHOWN ON GEORGIA STANDARDS NO 2321 AND NO 2325.	5'	4' ⚠2
3'	2'	5-3	1-1	1-3	6-6	0-6	1-3	9-0	0-9	1-6	3-3	2-10	3-4	3-0	4-6	4-0													4-0	1-3		2'	3'
	2'-6"	6-6	1-5	1-3	8-0	0-8	1-3	10-6	1-0½	1-6	3-3	2-10	3-4	3-0	4-6	4-0	5-1	4-8	5-4	5-0	7-0	6-6	6-11	6-6	7-5	7-1	9-5	8-11	5-0	1-6		2'-6"	
	3'	7-6	1-8	1-3	9-0	0-10½	1-3	12-0	1-3	1-6	3-3	2-10	3-4	3-0	4-6	4-0	5-1	4-8	5-4	5-0	7-0	6-6	6-11	6-6	7-5	7-1	9-5	8-11	5-9	1-9		3'	
4'	2'-6"	6-6	1-5	1-3	8-0	0-8	1-3	10-6	1-0½	1-6	3-9	3-4	4-0	3-8	5-3	4-8	6-1	5-8	6-7	6-3	8-5	7-10	8-5	8-0	9-2	8-10	11-7	11-0	5-0	1-6		2'-6"	4'
	3'	7-6	1-8	1-3	9-0	0-10½	1-3	12-0	1-3	1-6	3-9	3-4	4-0	3-8	5-3	4-8	6-1	5-8	6-7	6-3	8-5	7-10	8-5	8-0	9-2	8-10	11-7	11-0	5-9	1-9		3'	
	4'	9-0	2-1	1-3	11-0	1-2	1-3	14-6	1-7	1-6	3-9	3-4	4-0	3-10	5-3	4-11	6-2	5-9	6-8	6-6	8-7	8-3	8-7	8-2	9-5	9-3	11-10	11-6	7-0	2-3		4'	
5'	2'-6"	6-6	1-5	1-3	8-0	0-8	1-3	10-6	1-0½	1-6	4-3	3-10	4-6	4-2	5-11	5-4	7-1	6-8	7-8	7-4	9-10	9-3	9-11	9-6	10-10	10-6	13-8	13-1	5-0	1-6		2'-6"	5'
	3'	7-6	1-8	1-3	9-0	0-10½	1-3	12-0	1-3	1-6	4-3	3-10	4-6	4-2	5-11	5-4	7-1	6-8	7-8	7-4	9-10	9-3	9-11	9-6	10-10	10-6	13-8	13-1	5-9	1-9		3'	
	4'	9-0	2-1	1-3	11-0	1-2	1-3	14-6	1-7	1-6	4-3	3-10	4-6	4-4	5-11	5-7	7-2	6-9	7-9	7-7	9-11	9-7	10-1	9-8	11-1	10-11	13-11	13-7	7-0	2-3		4'	
	5'	10-9	2-6	1-3	13-6	1-5	1-3	17-6	1-11	1-6	4-3	3-10	4-6	4-4	5-11	5-7	7-2	6-9	7-9	7-7	9-11	9-7	10-1	9-8	11-1	10-11	13-11	13-7	8-6	2-9		5'	
6'	3'	7-6	1-8	1-3	9-0	0-10½	1-3	12-0	1-3	1-6	4-9	4-4	5-1	4-10	6-8	6-3	8-2	7-9	8-11	8-8	11-4	10-11	11-7	11-2	12-8	12-5	16-0	15-7	5-9	1-9		3'	6'
	4'	9-0	2-1	1-3	11-0	1-2	1-3	14-6	1-7	1-6	4-9	4-4	5-1	4-10	6-8	6-4	8-2	7-9	8-11	8-8	11-5	11-1	11-8	11-3	12-10	12-8	16-1	15-8	7-0	2-3		4'	
	5'	10-9	2-6	1-3	13-6	1-5	1-3	17-6	1-11	1-6	4-9	4-4	5-1	5-0	6-8	6-6	8-3	7-10	9-0	8-11	11-5	11-3	11-9	11-4	12-11	12-10	16-2	16-0	8-6	2-9		5'	
	6'	12-6	2-11	1-3	15-6	1-8	1-3	20-0	2-3	1-6	4-9	4-4	5-1	5-0	6-8	6-6	8-3	7-10	9-0	8-11	11-5	11-3	11-9	11-4	12-11	12-10	16-2	16-0	9-9	3-3		6'	

TRIPLE 45° AND 60° SKEW BOXES TO HAVE REINFORCING BENT AND HOOKED AS SHOWN FOR DOUBLES.

BEND A AND G BARS INTO PARAPET OR APRON AND HOOK AS SHOWN FOR SINGLES

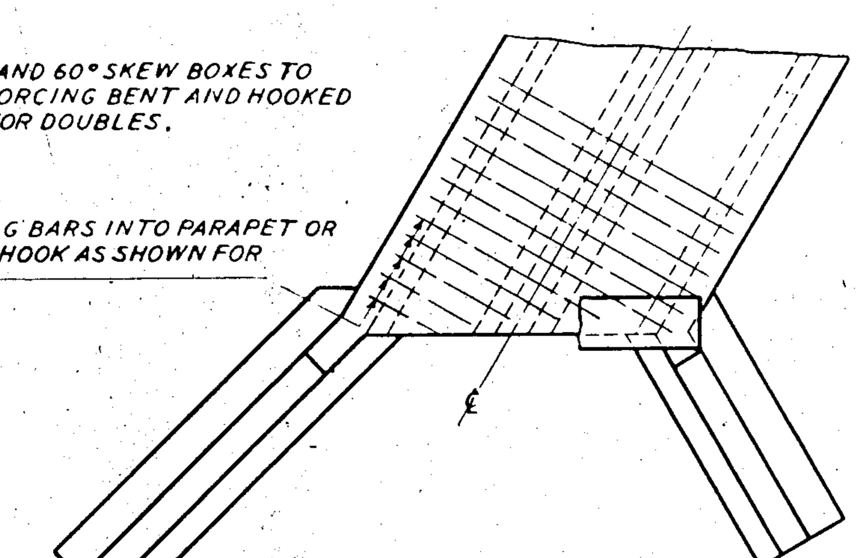

PLAN

DOUBLE 45° OR 60° SKEW BOX

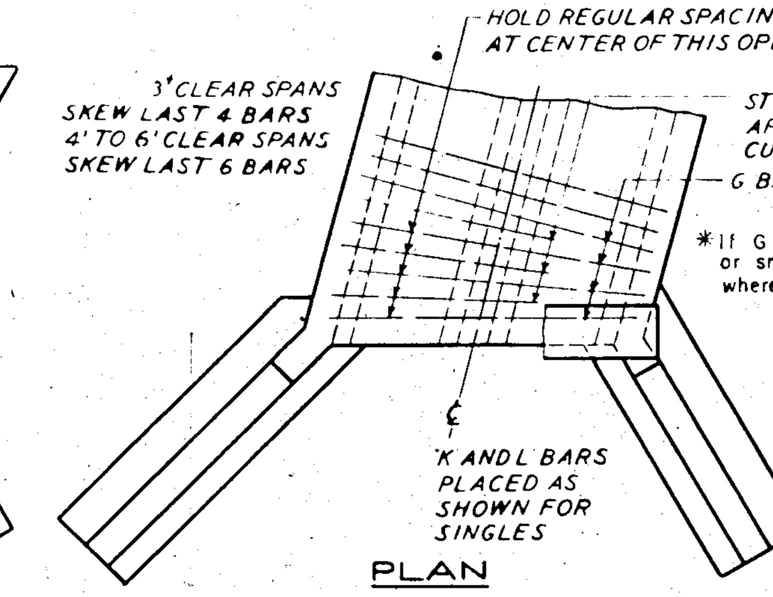

PLAN

DOUBLE 75° SKEW BOX

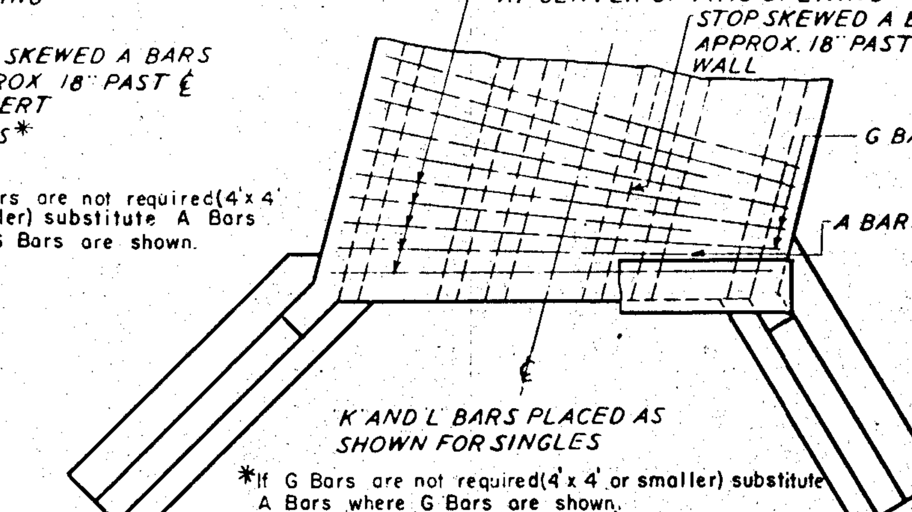

PLAN

TRIPLE 75° SKEW BOX

GENERAL NOTES

SPECIFICATIONS - GEORGIA STANDARD.
THIS PLAN IS NOT COMPLETE IN ITSELF - FOR GENERAL NOTES, DETAILS AND DIMENSIONS NOT SHOWN SEE GEORGIA STANDARD NO. 2321 FOR SINGLE CULVERTS AND GEORGIA STANDARD NO. 2325 FOR DOUBLE AND TRIPLE CULVERTS.

⚠ QUANTITIES - FOR WINGWALLS AND PARAPETS, SEE GEORGIA STANDARD NO. 2331.

QUANTITIES FOR BARREL TO REMAIN AS SHOWN ON GEORGIA STANDARDS NO. 2321 AND NO. 2325 (OR SPECIAL DESIGNS WHEN SPECIFIED).

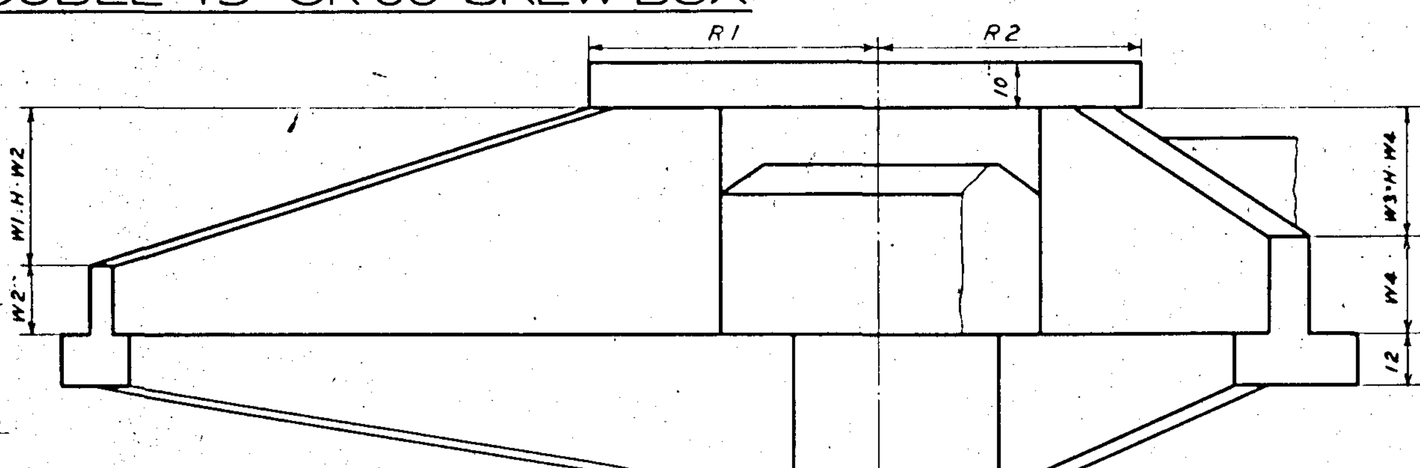

ELEVATION

NOTE - W1 AND W2 ARE DIMENSIONS FOR WINGS A, B AND C. W3 AND W4 ARE FOR WING D.

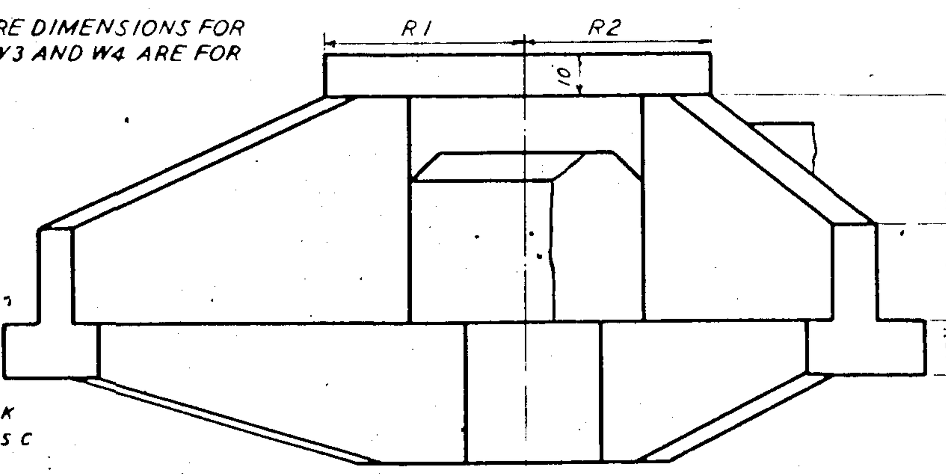

ELEVATION

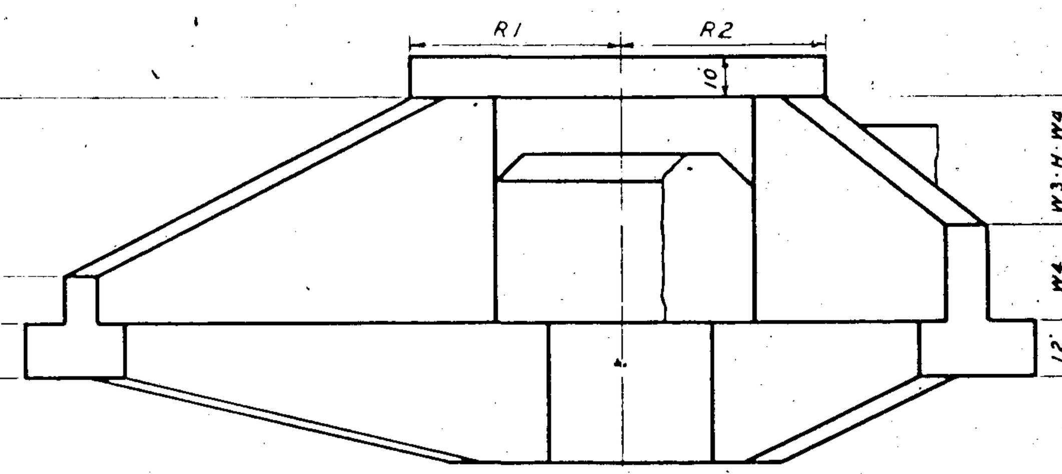

ELEVATION

DESIGN DATA

LOADING - TYPICAL HS 20-44 AND/OR MILITARY LOADING.

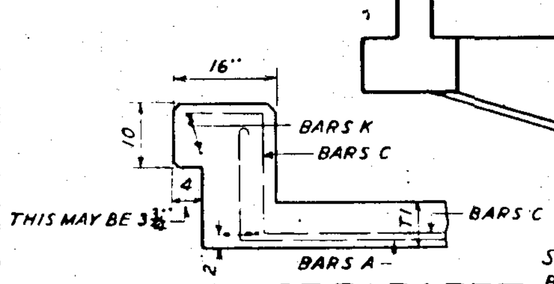

SECTION OF PARAPET

SHOWING BEND ON A BARS FOR 60° AND 45° SKEWS

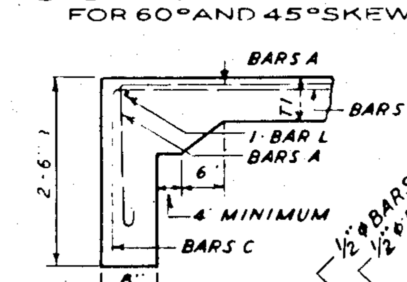

SECTION OF APRON

SHOWING BEND ON "A" BARS FOR 60° AND 45° SKEWS

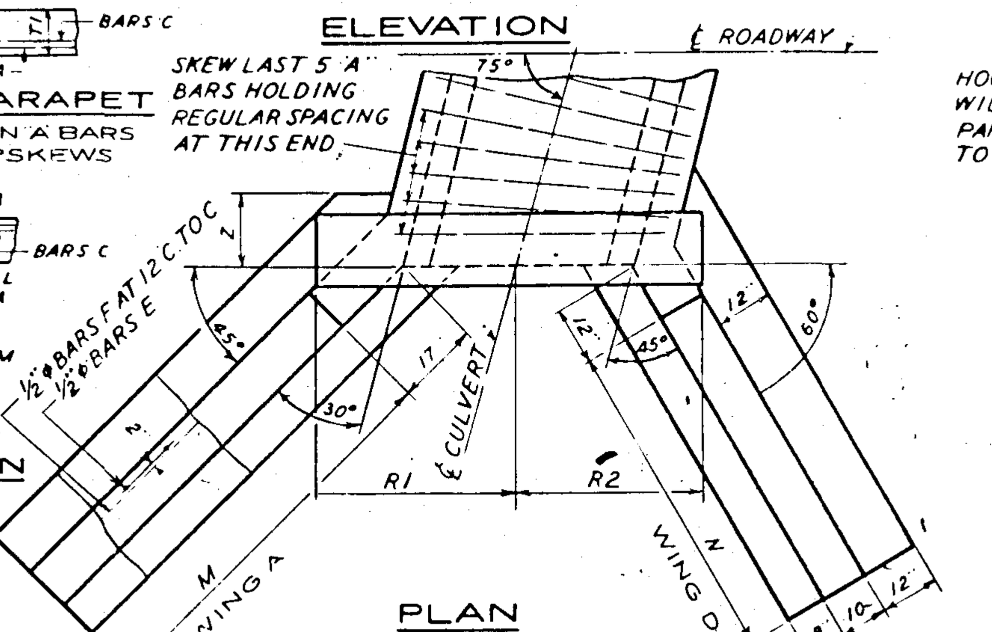

PLAN

75° SKEW

HOOK BARS A THAT DO NOT EXTEND FOR FULL WIDTH BARS IN TOP SLAB TO BE BENT INTO PARAPET AND HOOKED BARS IN BOTTOM SLAB TO BE BENT INTO TOE WALL AND HOOKED

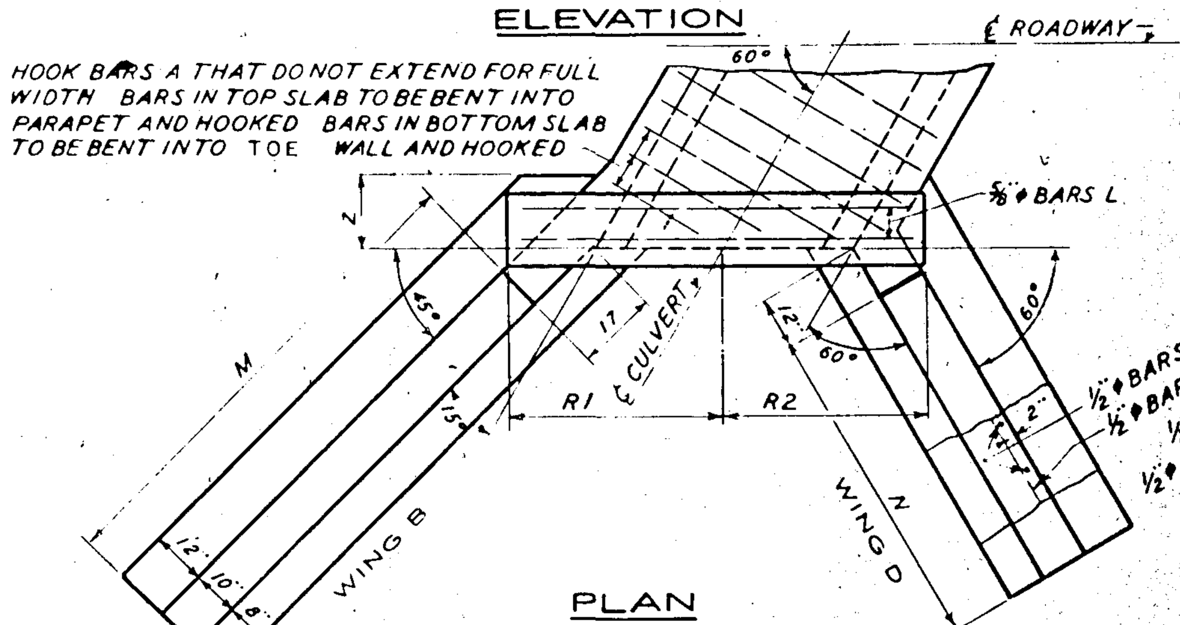

PLAN

60° SKEW

ONE BAR L IS IN EACH APRON REST IN PARAPETS.

HOOK BARS A THAT DO NOT EXTEND FOR FULL WIDTH. TOP SLAB BARS TO BE BENT INTO PARAPET AND HOOKED. BOTTOM SLAB BARS TO BE BENT INTO TOE WALL AND HOOKED.

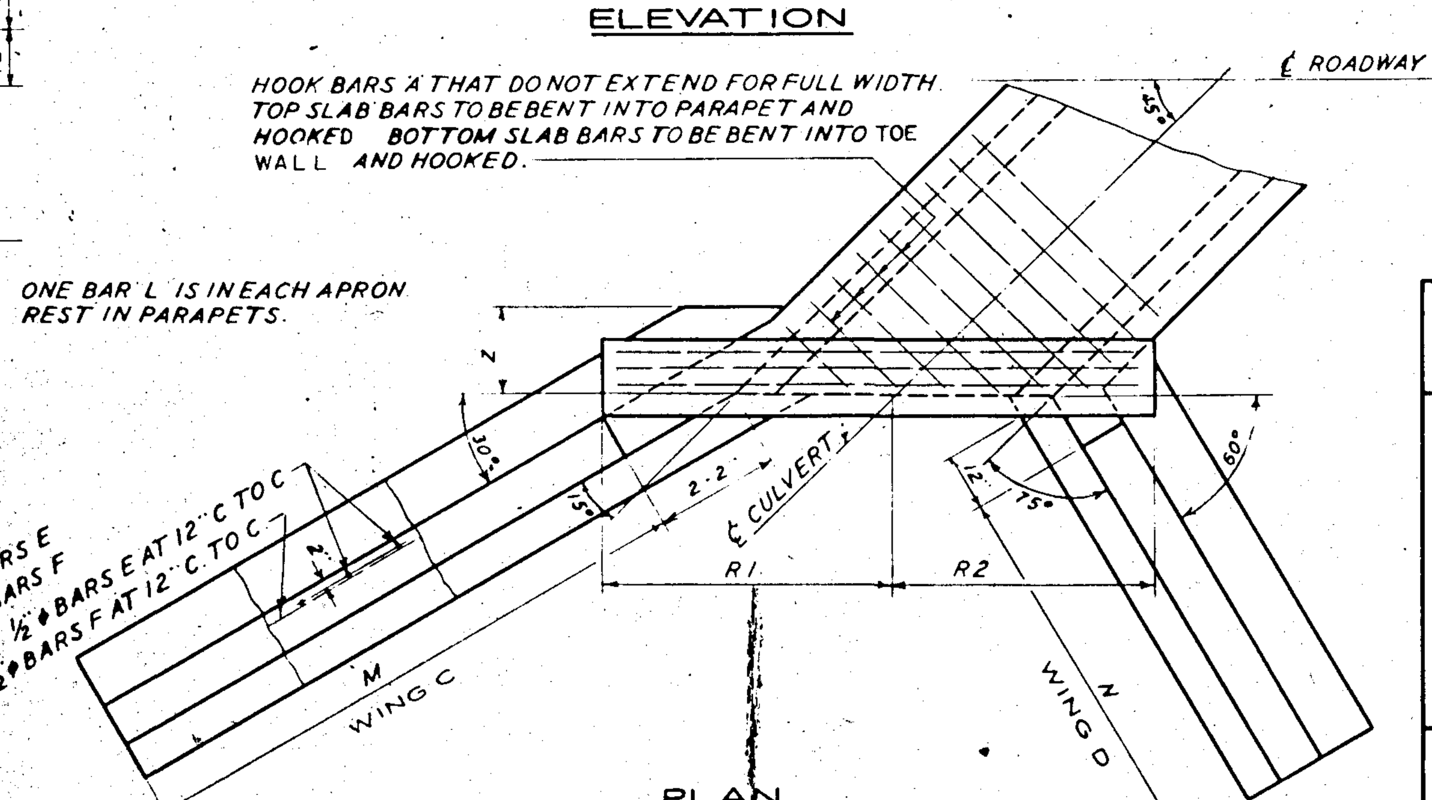

PLAN

45° SKEW

BY	REVISIONS	DATE
A.J.H.	QUANTITIES - STD. NO 2331	1-22-74
R.M.U.	ADD. 4'x 5', REM. 2'x 2'	2-26-80

DEPARTMENT OF TRANSPORTATION

STATE OF GEORGIA

STANDARD

REINFORCED CONCRETE BOX CULVERTS

SINGLE 3'X 2' TO TRIPLE 6'X 6'

FOR 75°, 60° AND 45° SKEWS

NO SCALE — DECEMBER 1959

DESIGNED ____
REDRAWN H.L.K.
TRACED H.L.K.
CHECKED O.P.G. Jr.

SUBMITTED [signature] BRIDGE ENGINEER

APPROVED [signature] STATE HIGHWAY ENGINEER

NUMBER 2328