STATE	PROJECT NUMBER	SHEET NO.	TOTAL SHEETS
GA.	STP00-0213-00(013)	48	121

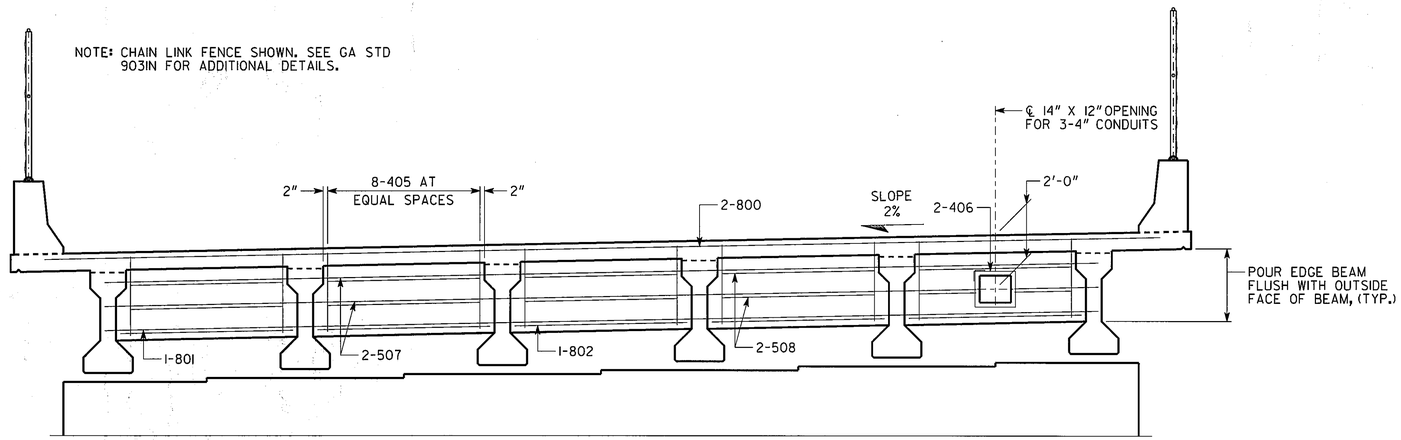

SECTION AT EDGE BEAM

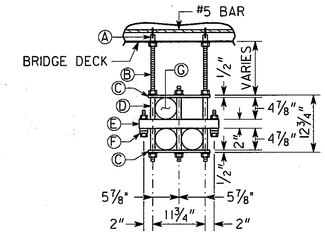

3 CONDUIT

Ⓐ 3/4" LOOP INSERT FOR 3/4"- 10 ROD.
Ⓑ 3/4"- 10 GALVANIZED MACHINE ROD.
Ⓒ 1/2" X 2" X 13 3/4" P.V.C. FLAT BAR.
Ⓓ 1" X 4 7/8" P.V.C. SPACER TUBE.
Ⓔ 1/4" X 2" X 2" X 17 3/4" FIBERGLASS TUBE.
Ⓕ STRAND CLAMP.
Ⓖ 4" DIA. FIBERGLASS CONDUIT.

DETAIL OF HANGER FOR TELEPHONE CONDUIT

NO SCALE

NOTE: PLACE HANGER ATTACHMENTS AT INTERVALS OF UP TO 15 FT.

* RADIAL DIMENSION IN SPAN 3.

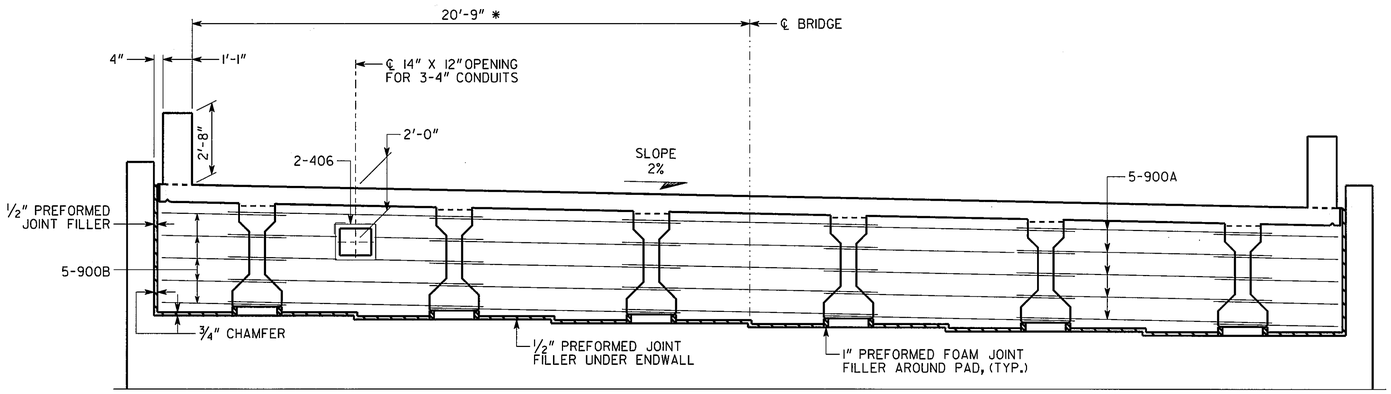

SECTION AT ENDWALL

BENT 1 - "LOOKING BACK"

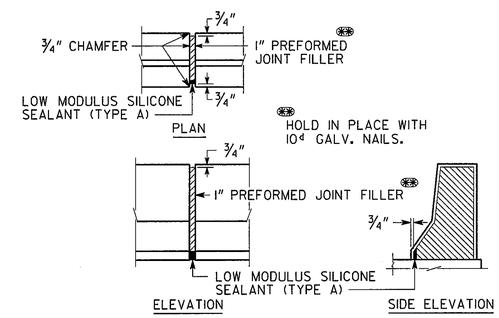

DETAILS OF 1" EXPANSION JOINT IN BARRIER

SCALE: 1/2" = 1'-0"

BRIDGE NO. 1 - ALTERNATE 1 OR 2

GEORGIA
DEPARTMENT OF TRANSPORTATION
PRECONSTRUCTION DIVISION-OFFICE OF BRIDGE DESIGN

SUPERSTRUCTURE DETAILS
CR 19 (OLD FEDERAL ROAD)
OVER CSX TRANSPORTATION
MURRAY COUNTY STP00-0213-00(013)

SCALE: 3/8" = 1'-0" (UNLESS NOTED) FEBRUARY 2010

DRAWING NO. 35-07
BRIDGE SHEET 7 OF 16

REVISIONS | DATE | BY

DESIGNED DLC | CHECKED SWW | REVIEWED WMD/WEI
DRAWN WMC | DESIGN GROUP SWW | APPROVED PVL

M642370B1.DGN

35-07