STATE	PROJECT NUMBER	SHEET NO.	TOTAL SHEETS
GA.	STP00-0213-00(013)	47	121

DIMENSION "D" IS MEASURED FROM TOP OF SLAB TO TOP OF BEAMS AT CENTERLINE BEARING. VARY "D" BETWEEN BEARINGS TO COMPENSATE FOR DEAD LOAD DEFLECTION AND VERTICAL CURVE. MAINTAIN A CONSTANT SLAB THICKNESS OF 7¾".

"D" = 8¾" FOR SPANS 1 AND 3.

"D" = 9⅛" FOR SPAN 2.

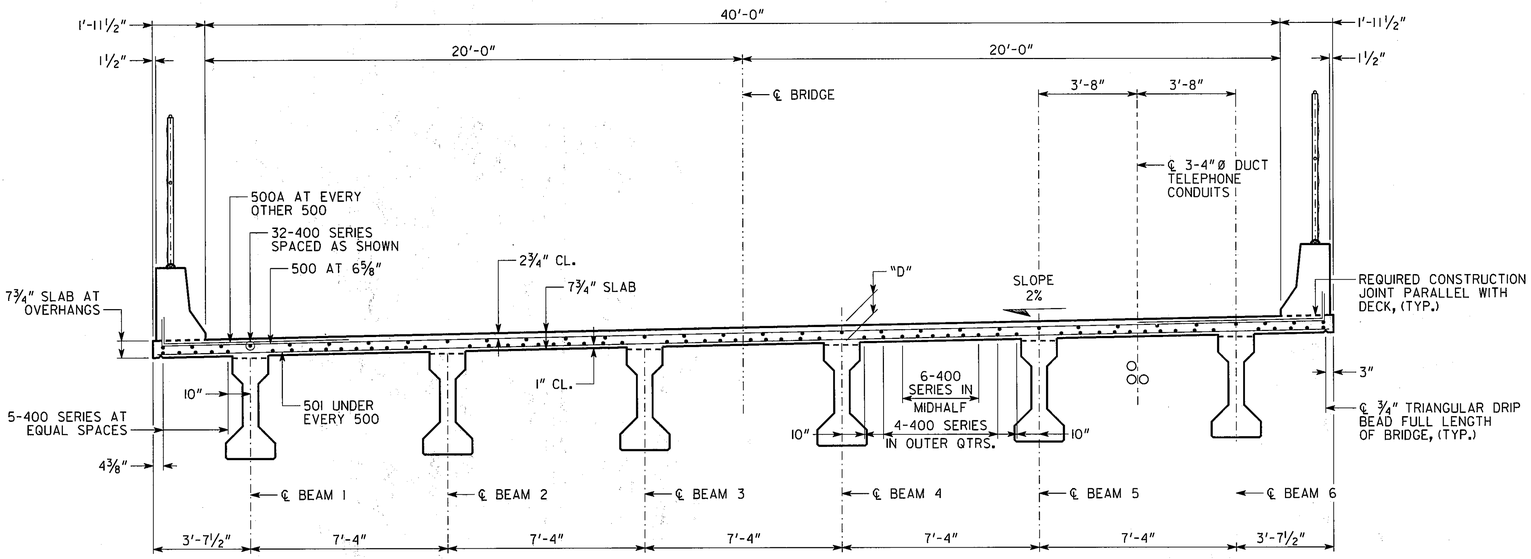

SECTION THRU SLAB

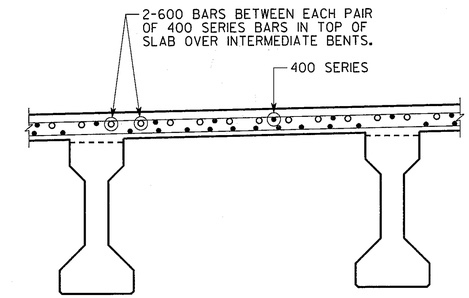

SECTION THRU SLAB AT INTERMEDIATE BENT

SCALE: ½" = 1'-0"

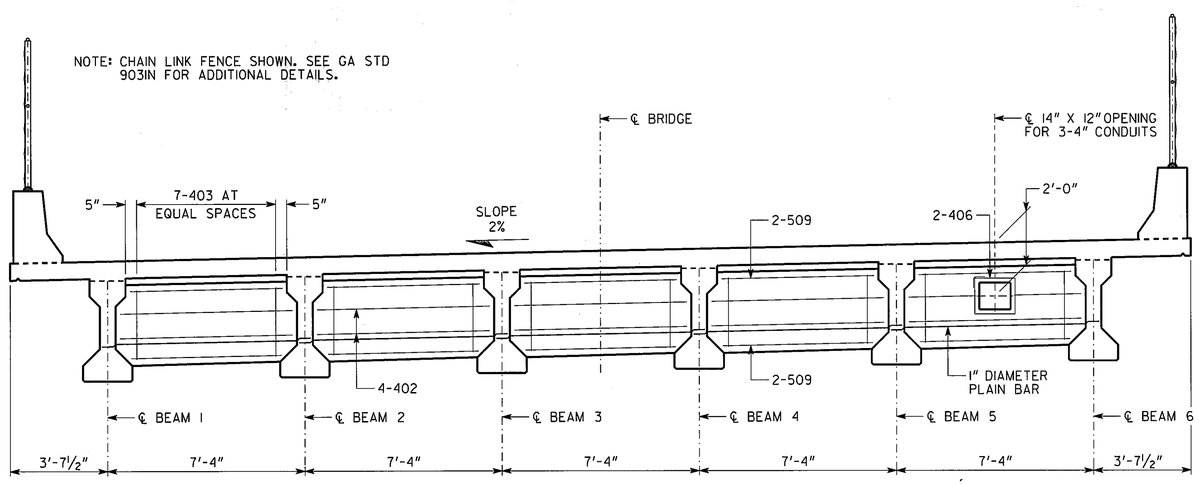

SECTION AT DIAPHRAGM

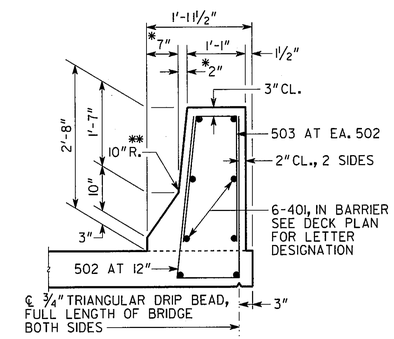

BARRIER DETAIL

SCALE: ¾" = 1'-0"

BRIDGE NO. 1 - ALTERNATE 1 OR 2

GEORGIA

DEPARTMENT OF TRANSPORTATION

PRECONSTRUCTION DIVISION-OFFICE OF BRIDGE DESIGN

SUPERSTRUCTURE DETAILS

CR 19 (OLD FEDERAL ROAD) OVER CSX TRANSPORTATION

MURRAY COUNTY STP00-0213-00(013)

SCALE: ⅜" = 1'-0" (UNLESS NOTED) FEBRUARY 2010

DATE	REVISIONS	BY

DRAWING NO. 35-06

BRIDGE SHEET 6 OF 16

DESIGNED DLC | CHECKED SWW | REVIEWED WMD/WEI

DRAWN WMC | DESIGN GROUP SWW | APPROVED PVL

M642370B1.DGN

35-06