STATE	PROJECT NUMBER	SHEET NO.	TOTAL SHEETS
GA	STP-187-1(26)	004	195

1. WHERE THE EMBANKMENT IS TO BE PLACED ON A HILLSIDE OR ANOTHER EXISTING EMBANKMENT HAVING A SLOPE OF 3 TO 1 OR STEEPER, THE FOUNDATION MIST BE BENCHED WHILE THE EMBANKMENT IS BEING MADE. (SEE DIAGRAM AT LEFT)

2. THE DIAGRAM SHOWS THAT BEFORE LAYER "A" IS PLACED THE FIRST STEP (1) IS CUT INTO THE SLOPE A MAXIMUM DISTANCE OF ABOUT 8 FEET (ABOUT 3/4 THE WIDTH OF THE TYPICAL D-8 BULLDOZER BLADE). SUCCESSIVE LAYERS B,C, AND D ARE THEN PLACED BEFORE LAYER "E" IS PLACED, THE SECOND STEP IS CUT 2.4 METERS INTO THE SLOPE AND SUCCESSIVE LAYERS ARE AGAIN PLACED. IF IT IS ANTICIPATED THAT THE VERTICAL PART OF THE STEP WILL EXCEED 4 FEET IF AN 8 FEET HORIZONTAL CUT IS MADE, THEN THE ACTUAL CUT STOPS WHEN THE VERTICAL PART REACHES A MAXIMUM OF 4 FEET ALLOWING THE HORIZONTAL DISTANCE TO VARY.

3. THE PROCESS OF BENCHING IS CONSIDERED INCIDENTAL TO THE ITEM OF GRADING COMPLETE AND NO ADDITIONAL MEASUREMENT OF QUANTITY OR PAYMENT WILL BE MADE FOR BENCHING.

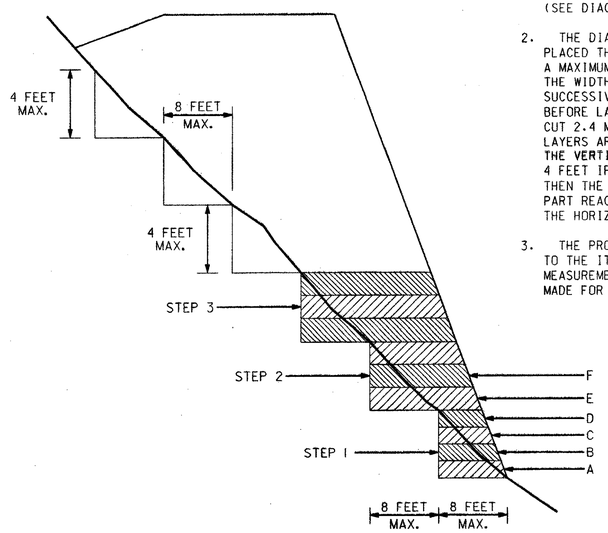

BENCHING DETAIL

NO SCALE

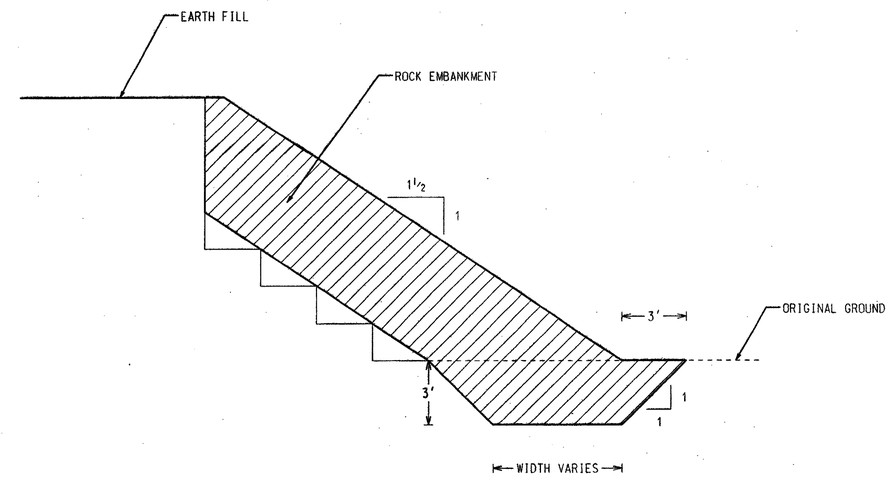

NOTE:
BENCH ROCK EMBANKMENT INTO EXISTING SLOPE AS REQUIRED.

ROCK EMBANKMENT SLOPE

APPLIES TO STATION TO STATION	LOCATION
18+00 +/- TO 19+00 +/-	RIGHT

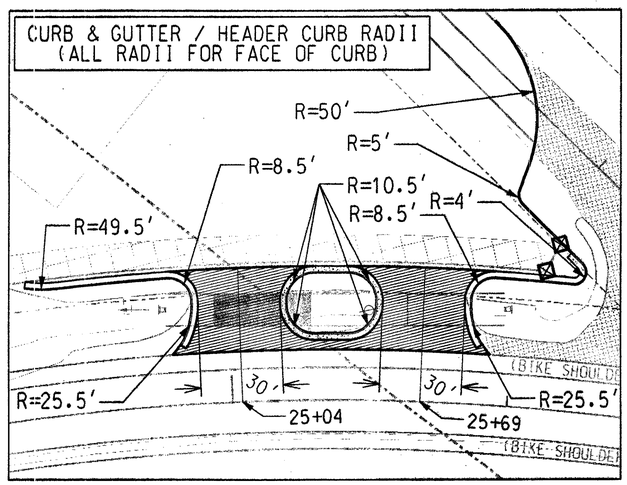

NO SCALE

DATE	REVISION	DATE	REVISION	DATE	REVISION

GEORGIA
DEPARTMENT OF TRANSPORTATION

GENERAL NOTES

SCALE: NO SCALE
COUNTY: CHEROKEE

04-01