STATE	PROJECT NUMBER	SHEET NO.	TOTAL SHEETS
GA.	STP00-2812-00(009)	7	169

TYPICAL SECTIONS
SITE 2

REVISED 3-25-2011

VOID

8

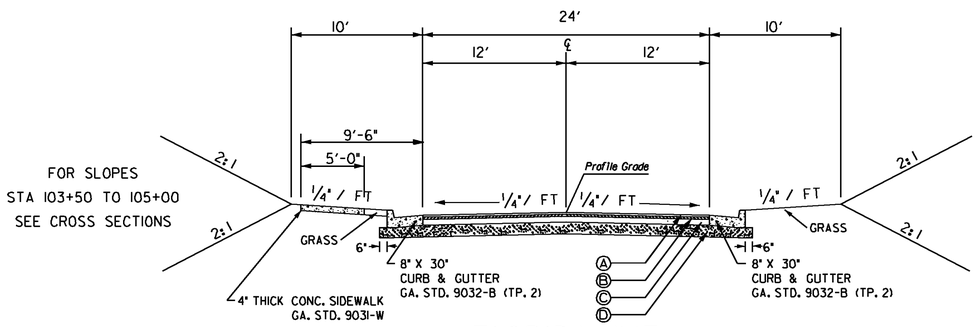

FLORIDA AVE.
STA 100+12 -STA 114+81.90

9

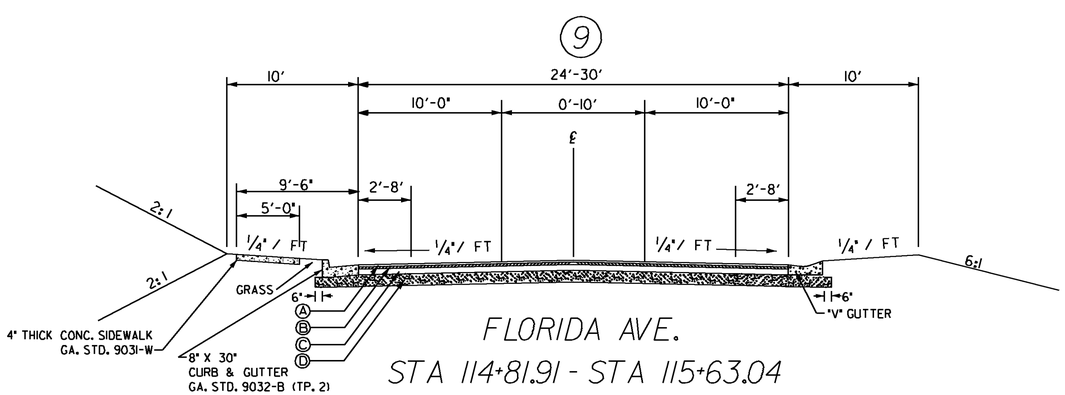

FLORIDA AVE.
STA 114+81.91 - STA 115+63.04

NO SCALE

10

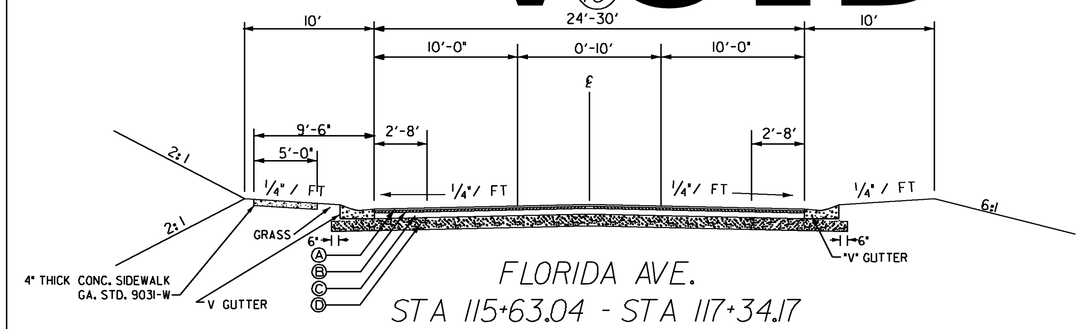

FLORIDA AVE.
STA 115+63.04 - STA 117+34.17

12

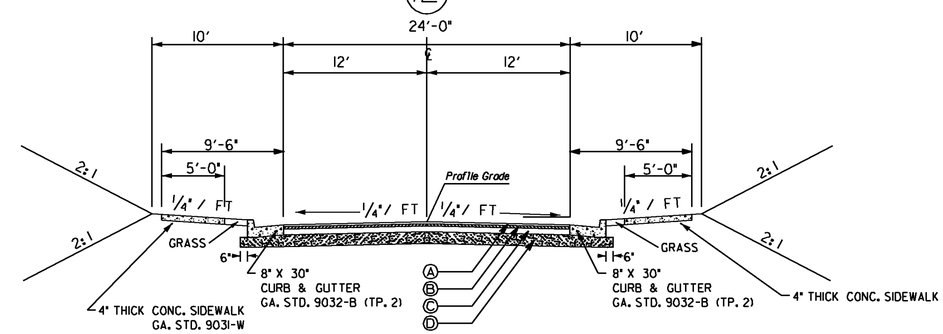

OAK STREET
STA 2+50.00 - STA 5+11.33
CHESTNUT STREET
STA 1+86.75 - STA 4+38.67
POPLAR STREET - WEST
STA 2+23.21 - STA 3+30.66
POPLAR STREET -EAST
STA 4+12.01 - STA 6+50.00

(A) RECYCLED ASPHALTIC CONCRETE 12.5 mm SUPERPAVE, GROUP 2 ONLY, INCL BITUM MATL & H-LIME, (165 Lbs/Sq Yds) TYPE II
(B) RECYCLED ASPHALTIC CONCRETE 19 mm SUPERPAVE, GP 1 OR 2, INCL BITUM MATL & H-LIME, (220 Lbs/Sq Yds)
(C) RECYCLED ASPHALTIC CONCRETE 25 mm SUPERPAVE, GP 1 OR 2, INCL BITUM MATL & H-LIME, (550 Lbs/Sq Yds)
(D) GRADED AGGREGATE BASE CRS, INCL MATL, 12 IN.

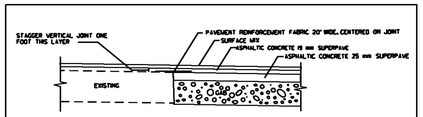

DETAIL A

GEORGIA
DEPARTMENT OF TRANSPORTATION
TYPICAL SECTIONS
PROJECT STP00-2812-00(009)
COUNTY HARALSON
DATE SH 3 OF 4

DRAWING NO. 5-3