BILL OF MATERIAL								
MARK	QTY.	DESCRIPTION	FT	IN	16TH	FAB MARK	MILL MARK	WEIGHT
E4	1	SECTION 4 BEAM			TOTAL WEIGHT =			11,215
	1	W36x160 ~ A709 GR.50(*H)	67	7	6	E4	5	10810
	3	PL 3/8x6 ~ A709 GR.36	2	10	0	pa3	.	65
	3	PL 3/8x6 ~ A709 GR.36	2	10	0	pb3	.	65
	184	3/4"ø ASTM A108 STUDS	0	5	0	.	.	135
	1	PL 2 3/16x10 ~ A709 GR.36	1	0	0	SP1	.	55
	1	PL 2 7/8x11 ~ A709 GR.36	1	0	0	SP2	.	85

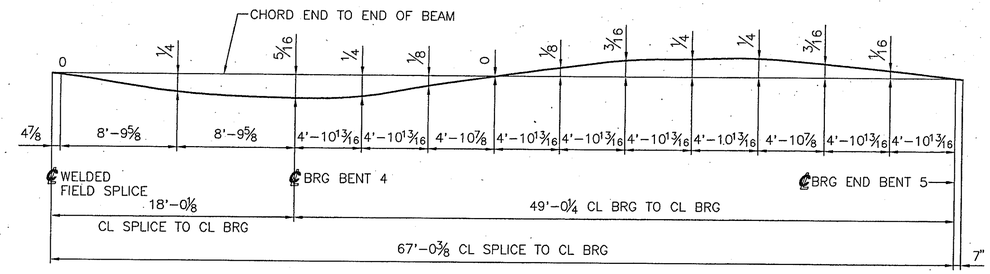

CAMBER DIAGRAM FOR BEAM E4

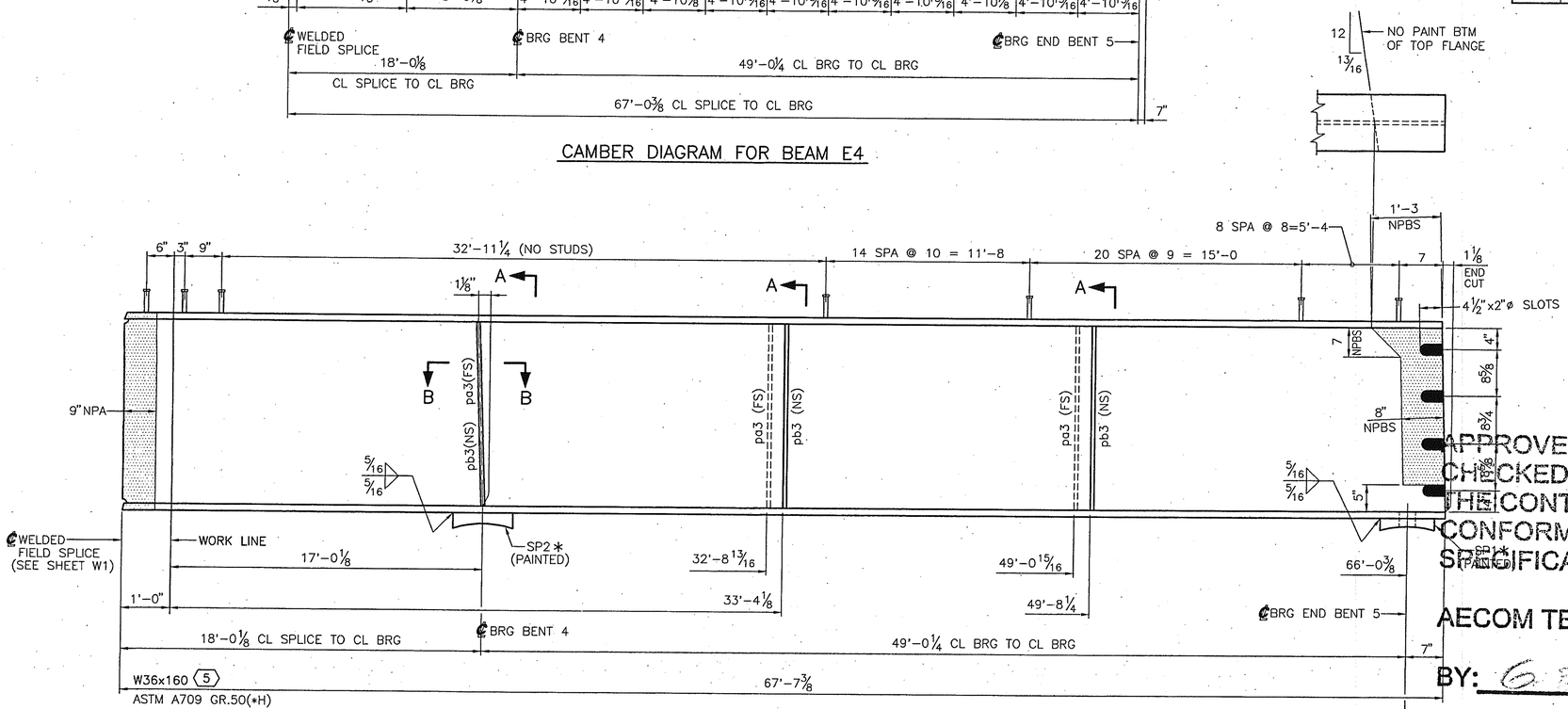

ONE – E4

(PAINTED EXCEPT AS NOTED)

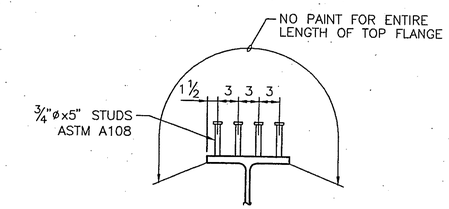

TYP SECTION @ STUDS

APPROVED IN GENERAL, DETAILS NOT CHECKED. THIS APPROVAL SHALL NOT RELIEVE THE CONTRACTOR OF ANY RESPONSIBILITY FOR CONFORMITY WITH THE CONTRACT PLANS AND SPECIFICATIONS.

AECOM TECHNICAL SERVICES, INC.

BY: G. Flowers 10-19-12

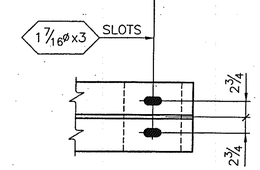

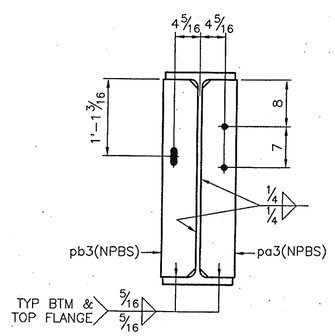

SECTION A

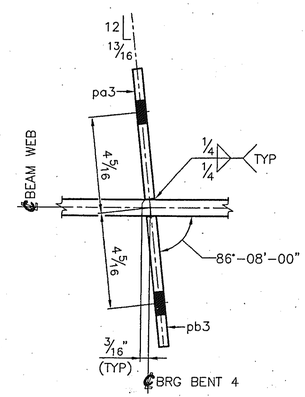

SECTION B–B

DATE: NOV 0 5 2012

Approved in general. Details not checked. This approval shall not relieve the Contractor of any responsibility for conformity with the contract Plans and Specifications.

Georgia DOT
Office of Bridge Design
By: JTM

NOTES:

SEE SHEET GN1 FOR GENERAL NOTES AND WELD TERMINATION DETAIL.

*NO PAINT ON BOTTOM RADIUS SURFACE OF SOLE PLATES. SEE NOTE 3.H. SHEET GN1.

FIELD BOLTS ¾"ø A307
OPEN HOLES 15/16"ø UNLESS NOTED
TYPE WELDING L.H. RODS OR SUBMERGED ARC

AISC CERTIFIED FABRICATOR

AUGUSTA IRON & STEEL WORKS Inc.
P.O. BOX 212479 (30917)
3781 MARTINEZ BLVD.
Phone 706-860-7719
AUGUSTA, GA 30907

REV.	BY	DATE	REVISION DESCRIPTION
△	△	△	

BEAM E4 DETAILS
CUSTOMER: C.W. MATTHEWS CONTRACTING CO.
WIDENING SR 1/US 27 OVER SR 166
BRIDGE No. 1 LEFT & RIGHT
GDOT PROJECT NO. NH000-0017-01(022)
CARROLL COUNTY, GEORGIA

DESIGNED BY: AECOM
DRAWN BY: GB DATE: 09/2012
CHECKED BY: JWJ DATE: 09/2012
STEEL SPEC: ASTM A709 GR.50 & GR.36

CONTRACT: 1374
SHEET D24 OF 25