APPROVED IN GENERAL, DETAILS NOT CHECKED. THIS APPROVAL SHALL NOT RELIEVE THE CONTRACTOR OF ANY RESPONSIBILITY FOR CONFORMITY WITH THE CONTRACT PLANS AND SPECIFICATIONS.

AECOM TECHNICAL SERVICES, INC.

BY: G. Edwards 11-1-12

DATE: NOV 05 2012

Approved in general. Details not checked. This approval shall not relieve the Contractor of any responsibility for conformity with the contract Plans and Specifications.

Georgia DOT
Office of Bridge Design
By: JTM

BILL OF MATERIAL									
MARK	QTY.	DESCRIPTION	FT	IN	16TH	FAB MARK	MIL MARK	WEIGHT
A3	1	SECTION 3 BEAM						
					TOTAL WEIGHT =			19,823
	1	W36x256 ~ A709 GR.50(*H)	46	0	4	ba14	3	11780
	1	W36x160 ~ A709 GR.50(*H)	47	0	3	bb14	4	7523
	5	PL 3/8x6 ~ A709 GR.36	2	10	0	pa3	.	108
	5	PL 3/8x6 ~ A709 GR.36	2	10	0	pc3	.	108
	308	3/4"ø ASTM A108 STUDS	0	5	0	.	.	227
	1	PL 2 1/2x10 ~ A709 GR.36	1	0	0	SP3	.	77

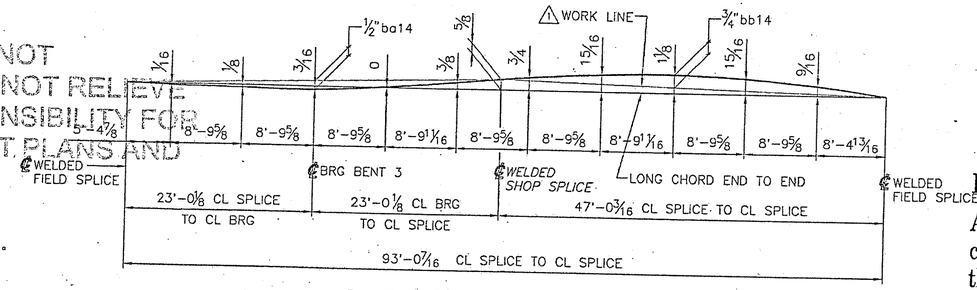

CAMBER DIAGRAM FOR BEAM A3

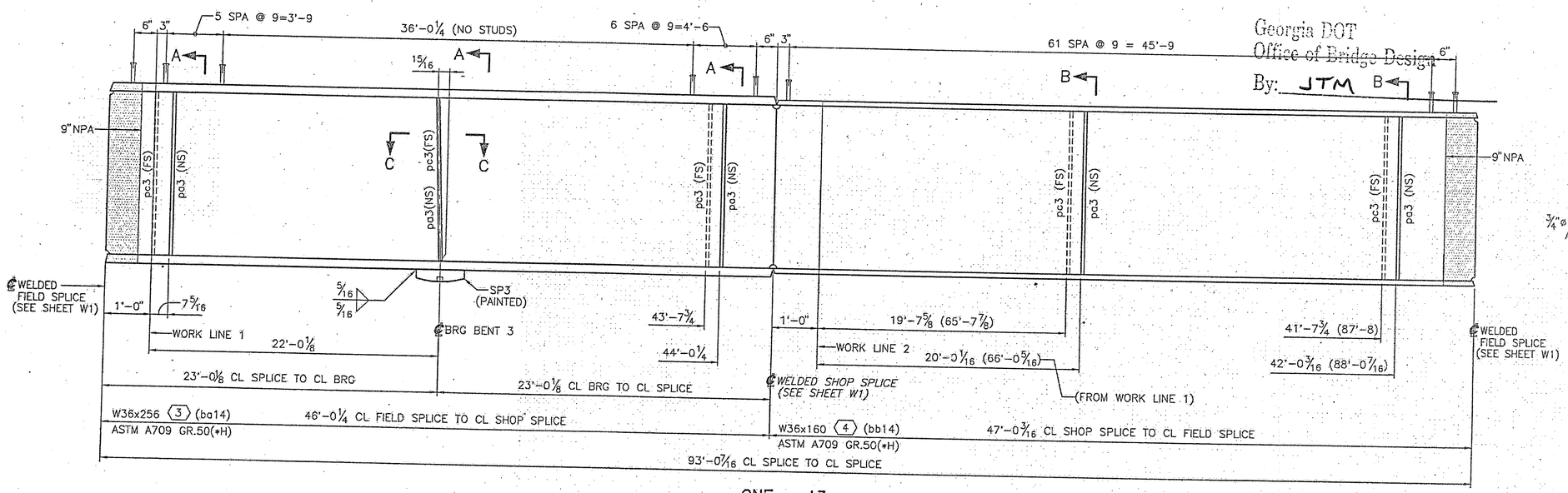

ONE – A3
(PAINTED EXCEPT AS NOTED)

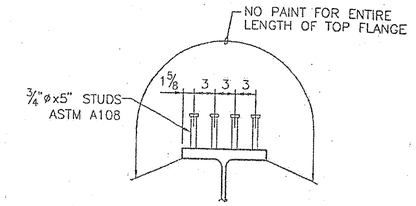

SECTION @ STUDS
W36x256 BEAM

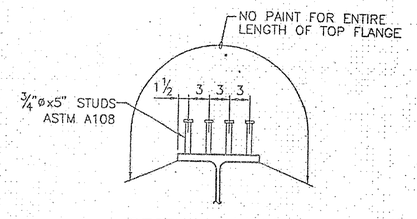

SECTION @ STUDS
W36x160 BEAM

NOTES:
SEE SHEET GN1 FOR GENERAL NOTES AND WELD TERMINATION DETAIL.

BEAM SECTIONS CAN BE FABRICATED SEPARATELY, THEN SHOP SPLICED.

STUB DIMENSIONS FOR ba14 & bb14 ARE TAKEN FROM A WORK LINE 1'-0" TO THE RIGHT OF THE WELDED SPLICES.

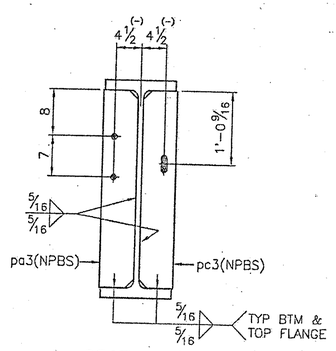

SECTION A
W36x256

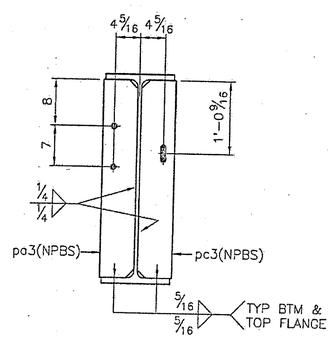

SECTION B
W36x160

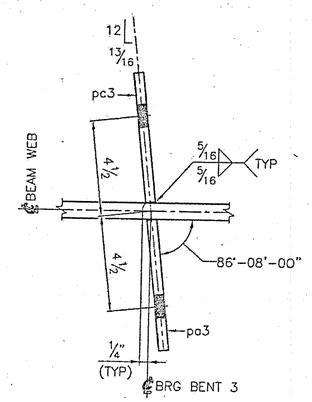

SECTION C–C
W36x256

FIELD BOLTS
3/4"ø A307

OPEN HOLES
15/16"ø
UNLESS NOTED

TYPE WELDING
L.H. RODS OR SUBMERGED ARC

AISC CERTIFIED FABRICATOR

AUGUSTA IRON & STEEL WORKS, Inc.
P.O. BOX 212479 (30917)
3781 MARTINEZ BLVD.
Phone 706-860-7719
AUGUSTA, GA 30907

REV.	BY	DATE	REVISION DESCRIPTION
△	△	△	PER APPROVAL COMMENTS
	JWJ	10/22 2012	

BEAM A3 DETAILS
CUSTOMER: C.W. MATTHEWS CONTRACTING CO.
WIDENING SR 1/US 27 OVER SR 166
BRIDGE No. 1 LEFT & RIGHT
GDOT PROJECT NO. NH000-0017-01(022)
CARROLL COUNTY, GEORGIA

DESIGNED BY: AECOM
DRAWN BY: GB DATE: 09/2012
CHECKED BY: JWJ DATE: 09/2012
STEEL SPEC: ASTM A709 GR.50 & GR.36

CONTRACT: 1374
SHEET D14 OF 25