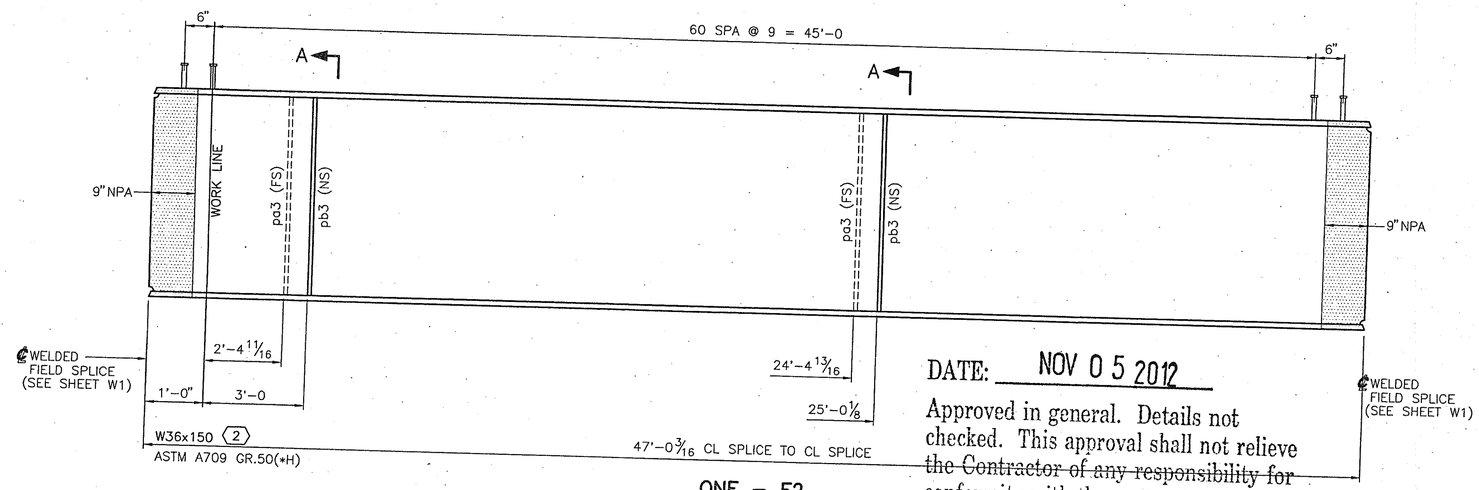

ONE – E2
(PAINTED EXCEPT AS NOTED)

DATE: NOV 0 5 2012

Approved in general. Details not checked. This approval shall not relieve the Contractor of any responsibility for conformity with the contract Plans and Specifications.

Georgia DOT
Office of Bridge Design
By: JTM

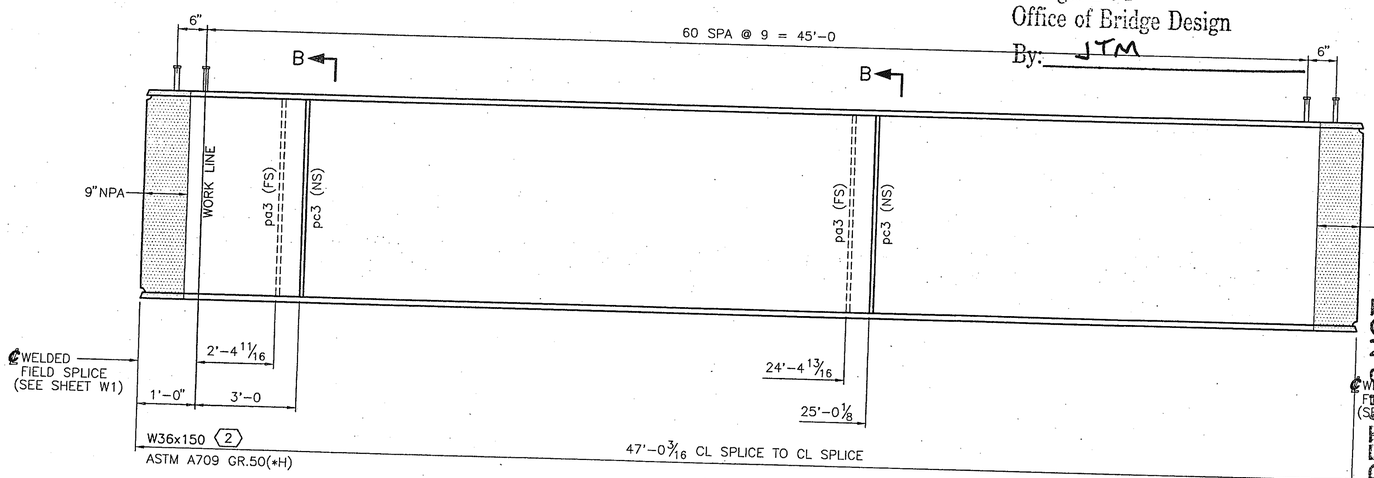

ONE – F2
(PAINTED EXCEPT AS NOTED)

BILL OF MATERIAL

MARK	QTY.	DESCRIPTION	FT	IN	16TH	FAB MARK	MILL MARK	WEIGHT
E2	1	SECTION 2 BEAM						
						TOTAL WEIGHT =		7,323
.	1	W36x150 ~ A709 GR.50(*H)	47	0	3	E2	2	7052
.	2	PL 3/8x6 ~ A709 GR.36	2	10	0	pa3	.	43
.	2	PL 3/8x6 ~ A709 GR.36	2	10	0	pb3	.	43
	252	3/4"ø ASTM A108 STUDS	0	5	0	.	.	185
F2	1	SECTION 2 BEAM						
						TOTAL WEIGHT =		7,323
.	1	W36x150 ~ A709 GR.50(*H)	47	0	3	F2	2	7052
.	2	PL 3/8x6 ~ A709 GR.36	2	10	0	pa3	.	43
.	2	PL 3/8x6 ~ A709 GR.36	2	10	0	pc3	.	43
	252	3/4"ø ASTM A108 STUDS	0	5	0	.	.	185

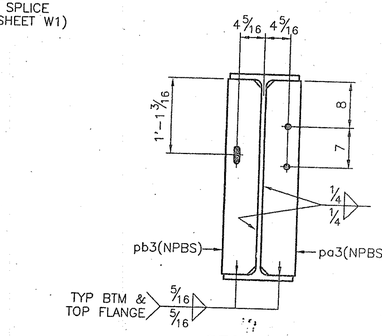

SECTION A
BEAM E2

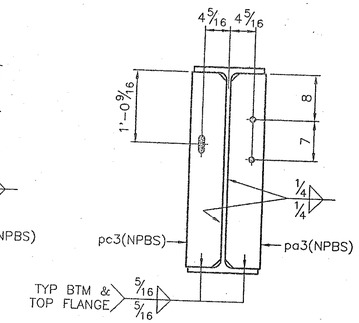

SECTION B
BEAM F2

NOTE:
SEE SHEET GN1 FOR GENERAL NOTES AND WELD TERMINATION DETAIL.

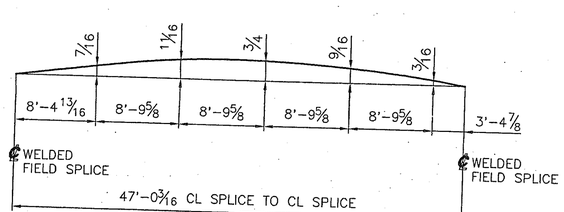

CAMBER DIAGRAM FOR BEAMS E2 & F2

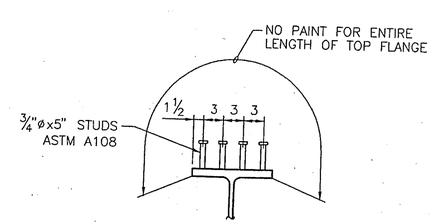

TYP SECTION @ STUDS

APPROVED IN GENERAL, DETAILS NOT CHECKED. THIS APPROVAL SHALL NOT RELIEVE THE CONTRACTOR OF ANY RESPONSIBILITY FOR CONFORMITY WITH THE CONTRACT PLANS AND SPECIFICATIONS.

AECOM TECHNICAL SERVICES, INC.

BY: G. Bland 11-16-12

FIELD BOLTS
3/4"ø A307
OPEN HOLES
15/16"ø
UNLESS NOTED
TYPE WELDING
L.H. RODS OR SUBMERGED ARC

AISC CERTIFIED FABRICATOR

AUGUSTA IRON & STEEL WORKS, Inc.
P.O. BOX 212479 (30917)
3781 MARTINEZ BLVD.
Phone 706-860-7719
AUGUSTA, GA 30907

REV.	BY	DATE	REVISION DESCRIPTION
△	△	△	

BEAMS E2 & F2 DETAILS
CUSTOMER: C.W. MATTHEWS CONTRACTING CO.
WIDENING SR 1/US 27 OVER SR 166
BRIDGE No. 1 LEFT & RIGHT
GDOT PROJECT NO. NH000-0017-01(022)
CARROLL COUNTY, GEORGIA

DESIGNED BY: AECOM
DRAWN BY: GB — DATE: 09/2012
CHECKED BY: JWJ — DATE: 09/2012
STEEL SPEC: ASTM A709 GR.50 & GR.36

CONTRACT: 1374
SHEET D13 OF 25