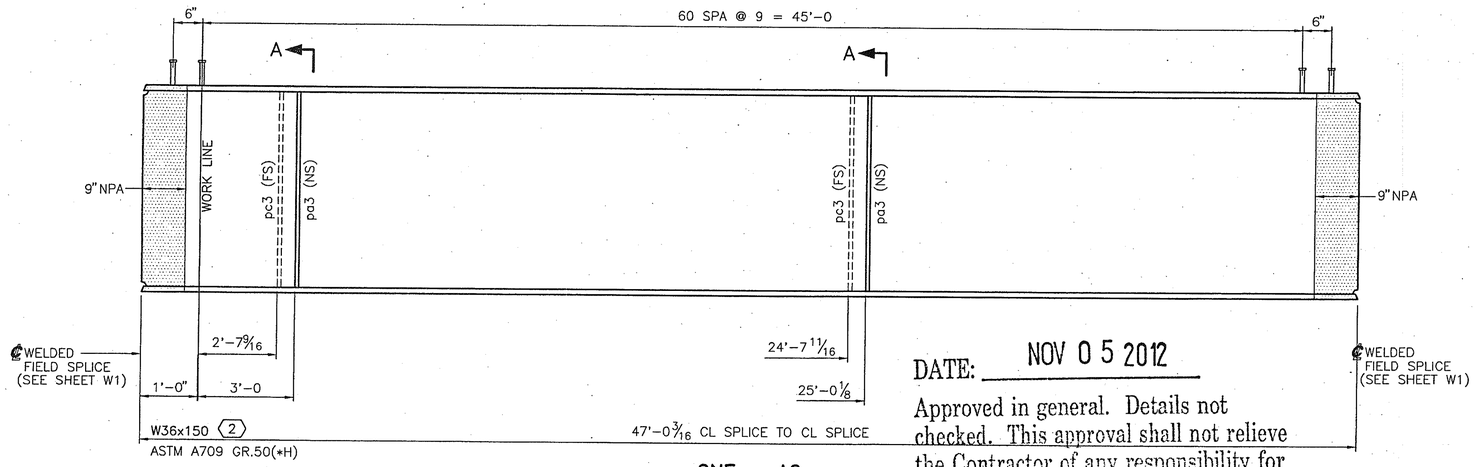

ONE – A2

(PAINTED EXCEPT AS NOTED)

DATE: NOV 0 5 2012

Approved in general. Details not checked. This approval shall not relieve the Contractor of any responsibility for conformity with the contract Plans and Specifications.

Georgia DOT
Office of Bridge Design
By: JTM

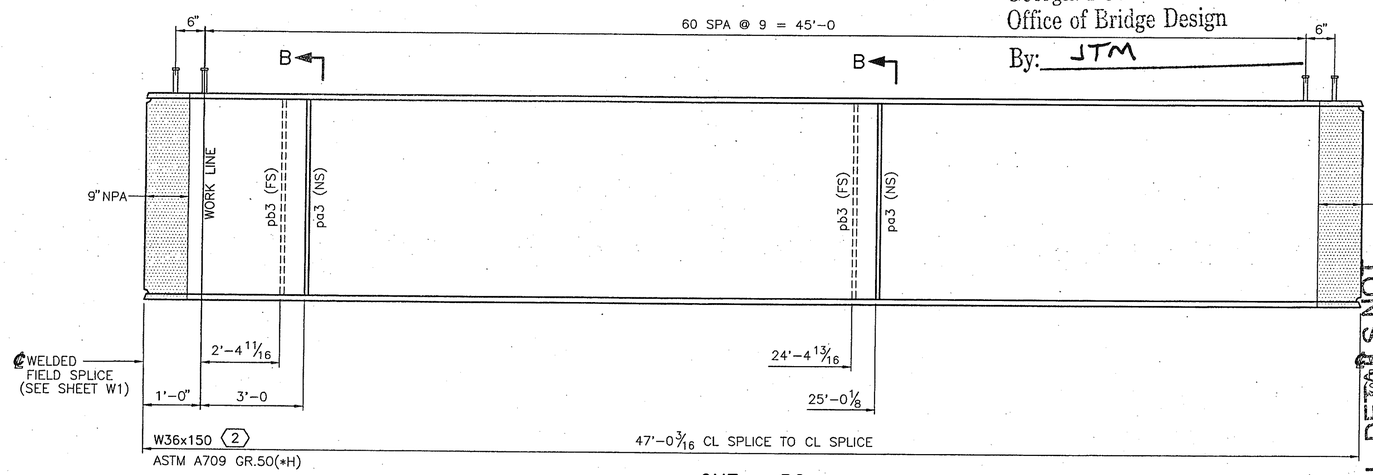

ONE – B2

(PAINTED EXCEPT AS NOTED)

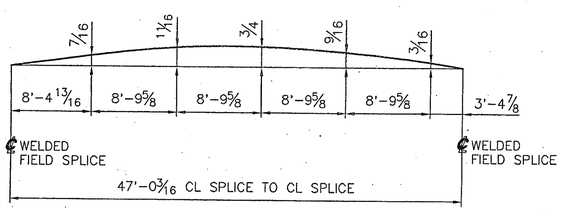

CAMBER DIAGRAM FOR BEAMS A2 & B2

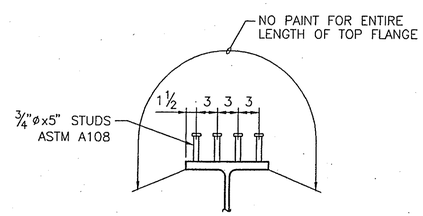

TYP SECTION @ STUDS

APPROVED IN GENERAL, DETAILS NOT CHECKED. THIS APPROVAL SHALL NOT RELIEVE THE CONTRACTOR OF ANY RESPONSIBILITY FOR CONFORMITY WITH THE CONTRACT PLANS AND SPECIFICATIONS.

AECOM TECHNICAL SERVICES, INC.

BY: 11-14-12

BILL OF MATERIAL

MARK	QTY.	DESCRIPTION	FT	IN	16TH	FAB MARK	MILL MARK	WEIGHT
A2	1	SECTION 2 BEAM			TOTAL WEIGHT =			7,323
.	1	W36x150 ~ A709 GR.50(*H)	47	0	3	A2	2	7052
.	2	PL 3/8x6 ~ A709 GR.36	2	10	0	pa3	.	43
.	2	PL 3/8x6 ~ A709 GR.36	2	10	0	pc3	.	43
	252	3/4"ø ASTM A108 STUDS	0	5	0	.	.	185
B2	1	SECTION 2 BEAM			TOTAL WEIGHT =			7,323
.	1	W36x150 ~ A709 GR.50(*H)	47	0	3	B2	2	7052
.	2	PL 3/8x6 ~ A709 GR.36	2	10	0	pa3	.	43
.	2	PL 3/8x6 ~ A709 GR.36	2	10	0	pb3	.	43
	252	3/4"ø ASTM A108 STUDS	0	5	0	.	.	185

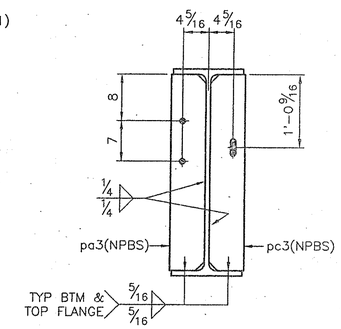

SECTION A
BEAM A2

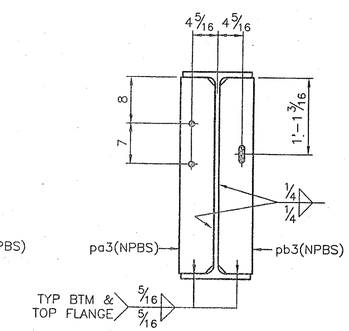

SECTION B
BEAM B2

NOTE:
SEE SHEET GN1 FOR GENERAL NOTES AND WELD TERMINATION DETAIL.

FIELD BOLTS
3/4"ø A307

OPEN HOLES
15/16"ø
UNLESS NOTED

TYPE WELDING
L.H. RODS OR SUBMERGED ARC

AISC CERTIFIED FABRICATOR

AUGUSTA IRON & STEEL WORKS, Inc.
P.O. BOX 212479 (30917)
3781 MARTINEZ BLVD.
Phone 706-860-7719
AUGUSTA, GA 30907

BEAMS A2 & B2 DETAILS
CUSTOMER: C.W. MATTHEWS CONTRACTING CO.
WIDENING SR 1/US 27 OVER SR 166
BRIDGE No. 1 LEFT & RIGHT
GDOT PROJECT NO. NH000-0017-01(022)
CARROLL COUNTY, GEORGIA

REV.	BY	DATE	REVISION DESCRIPTION
△	△	△	

DESIGNED BY: AECOM
DRAWN BY: GB — DATE: 09/2012
CHECKED BY: JWJ — DATE: 09/2012
STEEL SPEC: ASTM A709 GR.50 & GR.36

CONTRACT: 1374
SHEET D11 OF 25