APPROVED IN GENERAL, DETAILS NOT CHECKED. THIS APPROVAL SHALL NOT RELIEVE THE CONTRACTOR OF ANY RESPONSIBILITY FOR CONFORMITY WITH THE CONTRACT PLANS AND SPECIFICATIONS.

AECOM TECHNICAL SERVICES, INC.

BY: 10-19-12

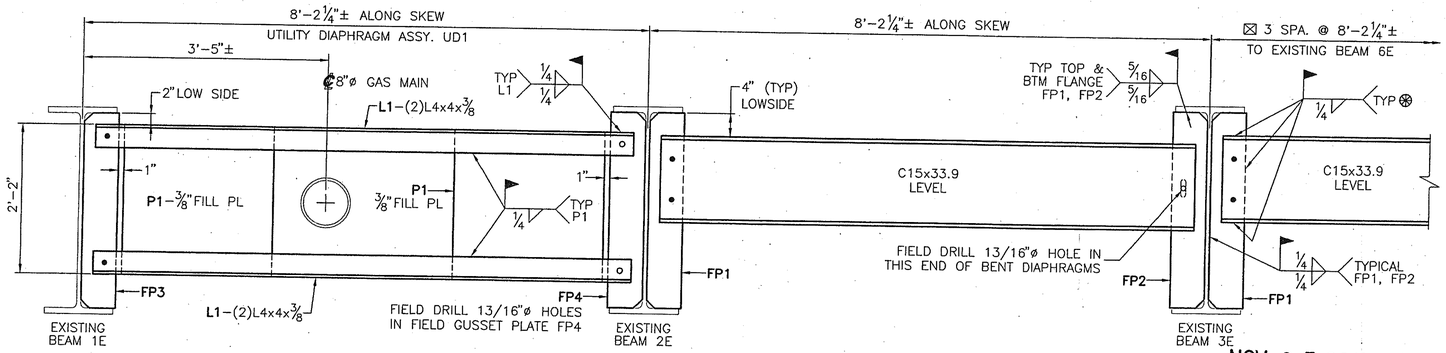

BENTS 2, 3 & 4 DIAPHRAGMS–LEFT BRIDGE

LOOKING AHEAD STATIONS

DATE: NOV 05 2012

Approved in general. Details not checked. This approval shall not relieve the Contractor of any responsibility for conformity with the contract Plans and Specifications.

Georgia DOT
Office of Bridge Design
By: JTM

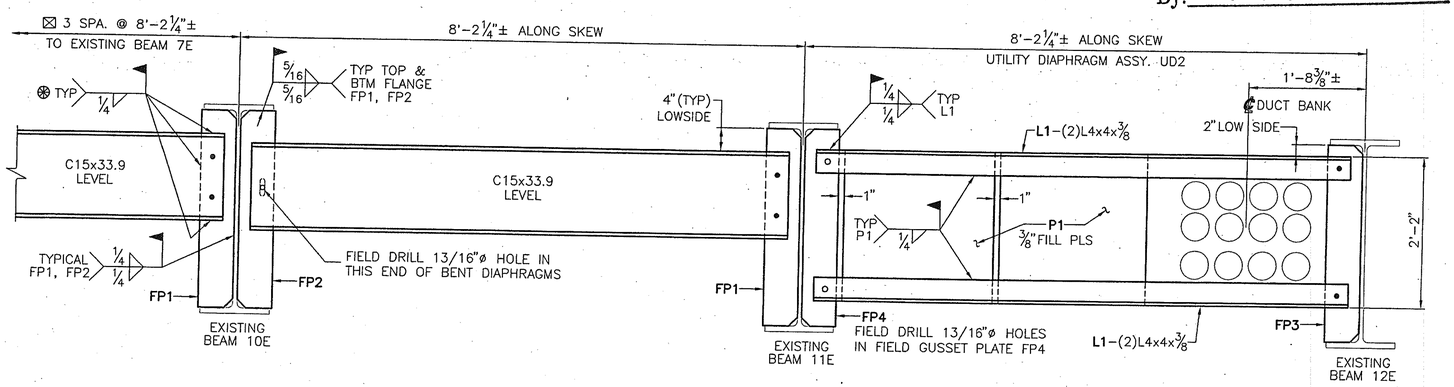

BENTS 2, 3 & 4 DIAPHRAGMS–RIGHT BRIDGE

LOOKING AHEAD STATIONS

FIELD NOTES:

⊛ WELD DIAPHRAGMS BEFORE DECK IS POURED EXCEPT NEW SKEWED BENT DIAPHRAGMS BETWEEN STAGES.

⊠ WELD NEW SKEWED BENT DIAPHRAGMS BETWEEN EXISTING BEAMS 4E AND 5E AND BEAMS 8E AND 9E AFTER STAGE III DECK IS POURED.

FIELD BOLT ALL NEW C15x33.9 DIAPHRAGMS TO GUSSET PLATES USING ¾"øx2" ASTM A307 ERECTION BOLTS WITH ONE ASTM F844 STANDARD WASHER EACH.

FIELD BOLT UTILITY DIAPHRAGM ANGLES L1 TO GUSSET PLATES USING ¾"øx2¼" ASTM A307 ERECTION BOLTS WITH ONE ASTM F844 STANDARD WASHER EACH.

SEE FRAMING PLAN SHEET E1 FOR DIAPHRAGM MARKS.

SEE SHEET E4 FOR BEARING ERECTION DETAILS.

FIELD BOLTS 3/4"ø A307	AISC CERTIFIED FABRICATOR
OPEN HOLES 15/16"ø UNLESS NOTED	
TYPE WELDING FIELD WELDS PER CONTRACTOR	

REV.	BY	DATE	REVISION DESCRIPTION
△	△	△	

AUGUSTA IRON & STEEL WORKS, Inc.
P.O. BOX 212479 (30917)
3781 MARTINEZ BLVD.
Phone 706-860-7719
AUGUSTA, GA 30907

ERECTION DETAILS–BENTS 2, 3, 4 EXISTING
CUSTOMER: C.W. MATTHEWS CONTRACTING CO.
WIDENING SR 1/US 27 OVER SR 166
BRIDGE No. 1 LEFT & RIGHT
GDOT PROJECT NO. NH000-0017-01(022)
CARROLL COUNTY, GEORGIA

DESIGNED BY: AECOM
DRAWN BY: JWJ — DATE: 09/19/12
CHECKED BY: GB — DATE: 09/2012
STEEL SPEC: ASTM A709 GR.50 & GR.36

CONTRACT: 1374
SHEET E3 OF 4