COUNTY	PROJECT NUMBER	SHEET NO.	TOTAL SHEETS
CARROLL	NH000-0017-01(022)	249	333

STATE	COUNTY	PROJECT NUMBER	SHEET NO.	TOTAL SHEETS
GA.				

AERIAL BUTT SPLICE DETAIL

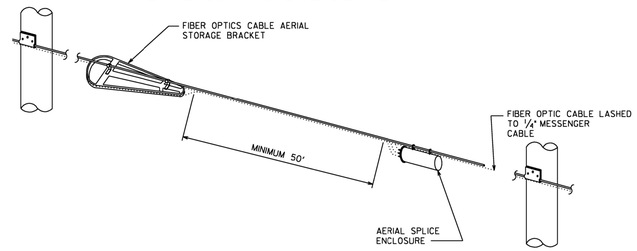

AERIAL SLACK LOOP DETAIL

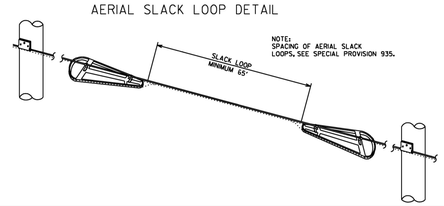

NOTE:
SPACING OF AERIAL SLACK LOOPS, SEE SPECIAL PROVISION 935.

AERIAL DROP DETAIL

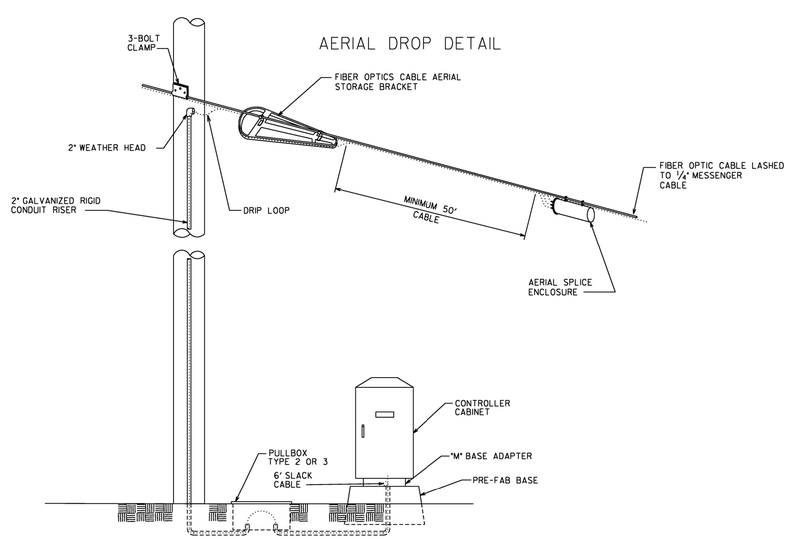

FIBER OPTIC DETAIL DROP - CABLE TERMINATION IN CONTROL CABINET MODEL 332 - MASTER SYSTEM

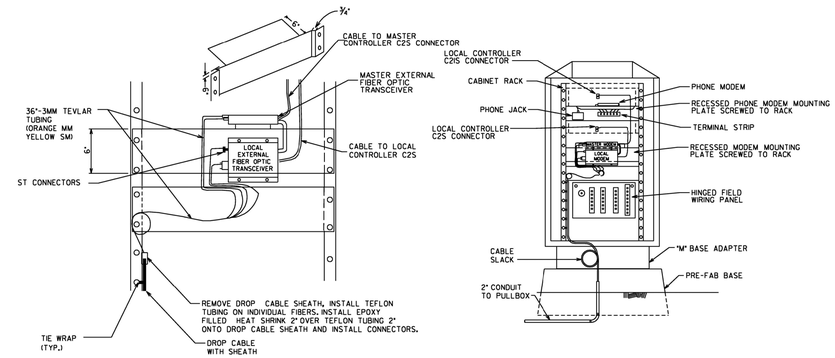

FIBER OPTIC DETAIL DROP-CABLE TERMINATION IN CONTROL CABINET - MODEL 332 LOCAL SYSTEM

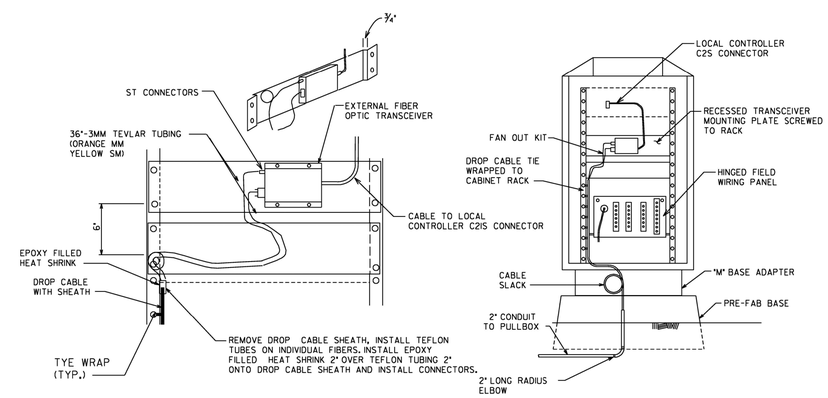

DATE	REVISION DESCRIPTION	REV. BY:

DEPARTMENT OF TRANSPORTATION
STATE OF GEORGIA

TRAFFIC SIGNAL DETAIL

FIBER OPTICS DETAILS
1 OF 2

APRIL 2010
NOT TO SCALE - REPORT ERRORS

DETAIL NUMBER
TS-10

AECOM

REVISION DATES		

STATE OF GEORGIA
DEPARTMENT OF TRANSPORTATION
OFFICE: PROGRAM DELIVERY
CONSTRUCTION DETAILS

SR1/US 27 @ SR166
INTERCHANGE RECONSTRUCTION
PI NO: 621990

DRAWING No.
40-35