STATE	PROJECT NUMBER	SHEET NO.	TOTAL SHEETS
GA.	NH000-0017-01(022)	212	333

VOID

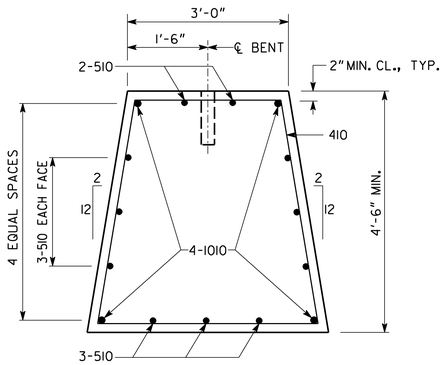

SECTION A-A

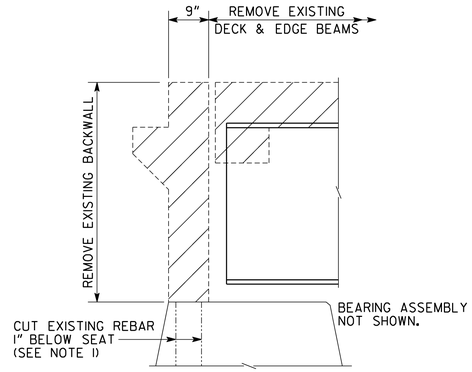

SECTION B-B

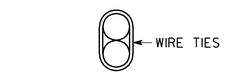

BARS TO BE BUNDLED SHALL
BE BUNDLED VERTICALLY

BUNDLING DETAIL

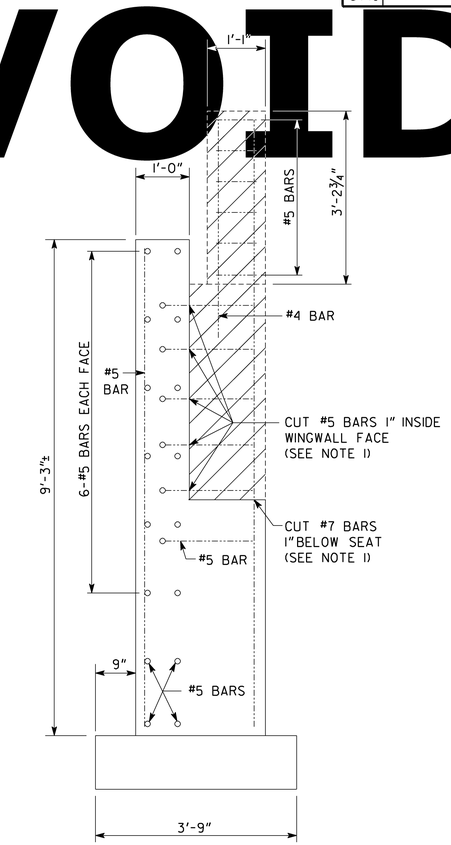

SECTION C-C

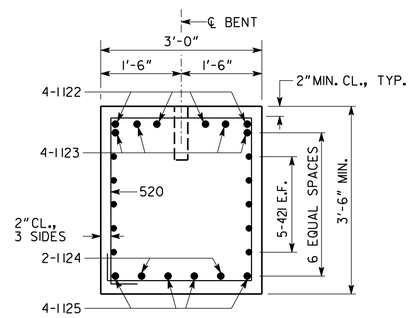

SECTION D-D

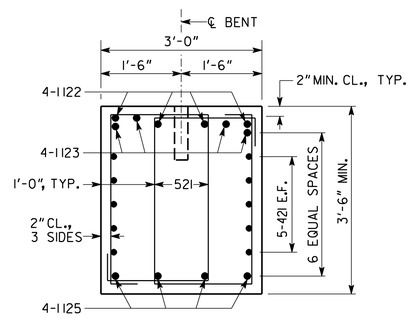

SECTION E-E

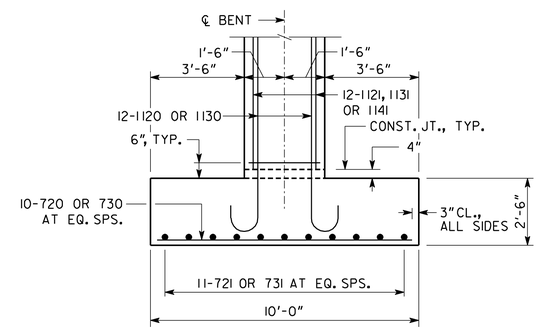

SECTION F-F

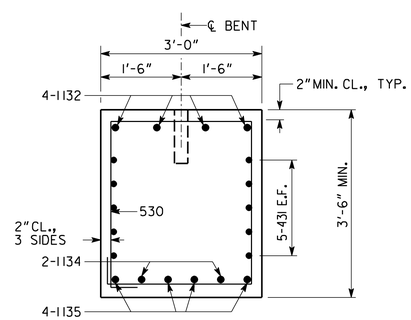

SECTION G-G

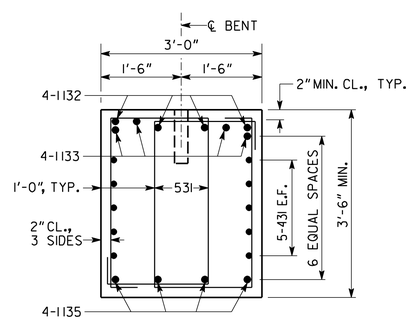

SECTION H-H

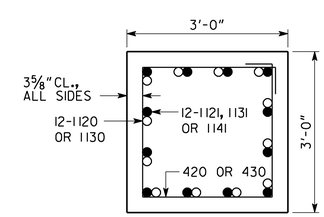

SECTION J-J

NOTES:

1. REPAIR AND REPROFILE CONCRETE SURFACE WITH RAPID SETTING PATCHING MATERIAL IN ACCORDANCE WITH SECTION 934 OF THE STANDARD SPECIFICATIONS.

BRIDGE NO. 1 LT. & RT.

AECOM

GEORGIA
DEPARTMENT OF TRANSPORTATION
PRECONSTRUCTION DIVISION-OFFICE OF BRIDGE DESIGN

SUBSTRUCTURE DETAILS
WIDENING SR 1/US 27 OVER SR 166

CARROLL COUNTY — NH000-0017-01(022)

SCALE: NO SCALE U.N.O. — MARCH 2011

DRAWING NO.	REVISIONS	DATE	BY
35-16			
BRIDGE SHEET 16 OF 18			

DESIGNED	LS	CHECKED	GLE	REVIEWED	WMD/WEI
DRAWN	LS	GDOT LIAISON	CB	APPROVED	BFR