COUNTY	PROJECT NUMBER	SHEET NO.	TOTAL SHEETS
CARROLL	NH000-0017-01(022)	11	333

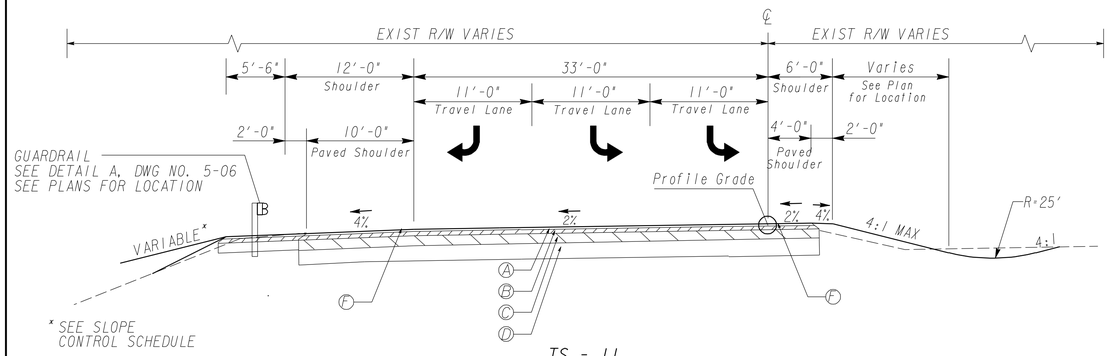

TS - 11
TANGENT SECTION

RAMP C
STA 61+40.00 TO STA 62+38.00

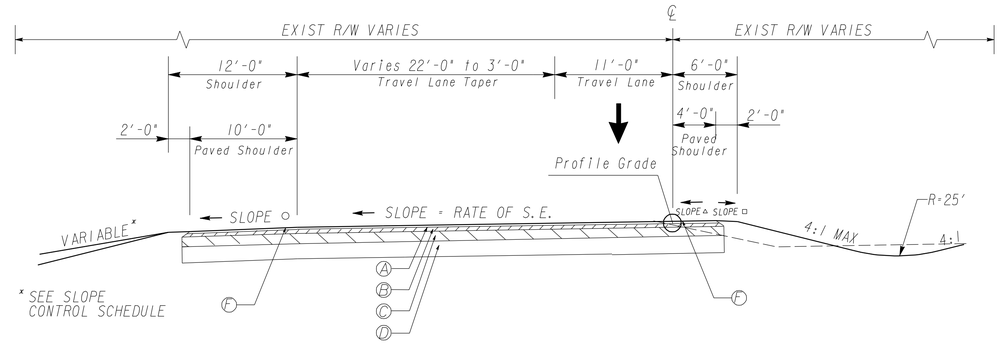

TS - 12
SUPERELEVATED SECTION

RAMP C
STA 60+63.00 TO STA 61+40.00
STA 62+38.00 TO STA 67+50.00

PAVEMENT MATERIAL SCHEDULE	
A	RECYCLED ASPH CONC 12.5 MM SUPERPAVE, GP2 ONLY, INCL POLY-MOD BITUM MATL & H LIME (165LB/SY)
B	RECYCLED ASPH CONC 19MM SUPERPAVE, GP1 OR GP2, INCL BITM MATL & H LIME (330LB/SY)
C	RECYCLED ASPH CONC 25MM SUPERPAVE, GP1 OR GP2, INCL BITM MATL & H LIME (660LB/SY)
D	14" GRADED AGGREGATE BASE
E	8"X30" CONC. CURB & GUTTER GDOT STD 9032B, TP2
F	RUMBLE STRIPS (SKIP)

x SLOPE CONTROL SCHEDULE		
SLOPE	CUT	FILL
4:1	0-10'	0-10'
2:1	OVER 10'	OVER 10'

NOTE:
GUARDRAIL WILL BE REQUIRED IN ALL FILL AREAS WITH SLOPES STEEPER THAN 3:1 AND HEIGHT OVER 10'.

○ SLOPE 4% OR RATE OF S.E. WHICHEVER IS GREATER

△ SLOPE OF PAVED SHOULDERS SAME AS ADJACENT TRAVEL LANES

□ SLOPE AS FOLLOWS:
S.E. RATE OF 4% OR LESS USE 4%
S.E. RATE OF 5% USE 3%
S.E. RATE OF 6% USE 2%
S.E. RATE OF 7% USE 1%
S.E. RATE OF 8% USE FLAT

ALGEBRAIC DIFFERENCE IN PAVING AND SHOULDER SLOPES NOT TO EXCEED 8%

SEE ROADWAY PLANS FOR SUPERELEVATION RATES AND TRANSITIONS

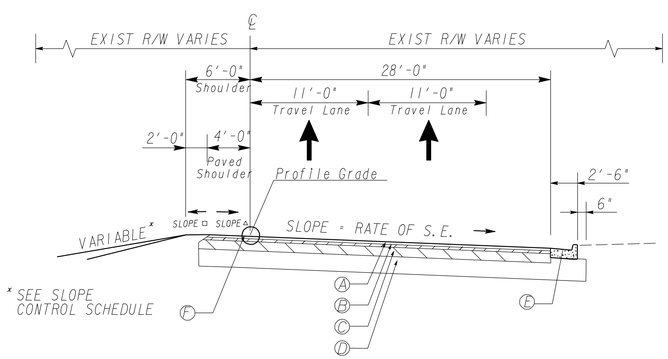

TS - 13
SUPERELEVATED SECTION

RAMP D
STA 80+60.00 TO STA 81+58.00

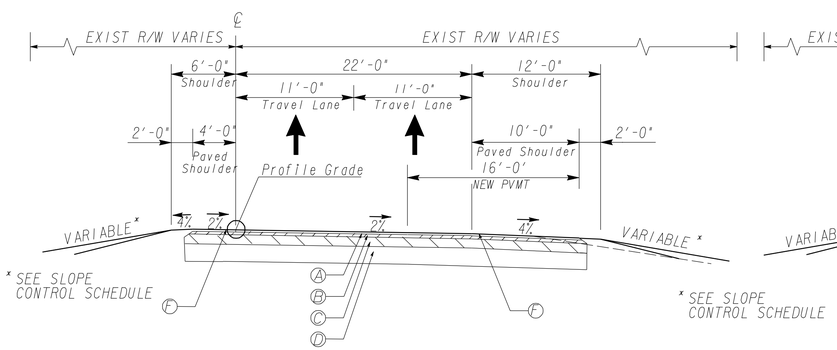

TS - 14
TANGENT SECTION

RAMP D
STA 81+58.00 TO STA 83+35.00

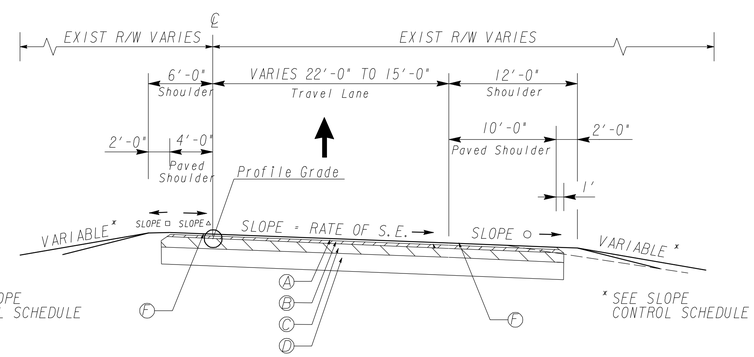

TS - 15
SUPERELEVATED SECTION

RAMP D
STA 83+35.00 TO STA 90+00.00

AECOM

SCALE: NTS

REVISION DATES		

STATE OF GEORGIA
DEPARTMENT OF TRANSPORTATION
OFFICE: PROGRAM DELIVERY

TYPICAL SECTIONS

SR 1/US 27 @ SR 166
INTERCHANGE RECONSTRUCTION
PI: 621990

DRAWING No.
5-05