COUNTY	PROJECT NUMBER	SHEET NO.	TOTAL SHEETS
CARROLL	NH000-0017-01(022)	9	333

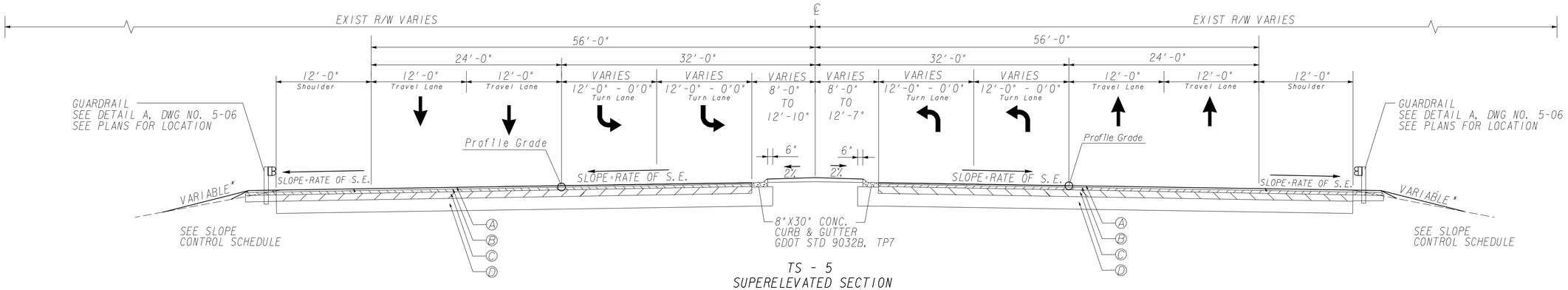

TS - 5
SUPERELEVATED SECTION
US 27
STA 16+46.00 TO STA 16+68.50 (BEGIN APPROACH SLAB)
STA 20+20.50 (END APPROACH SLAB) TO STA 20+44.00

NOTE: SEE DWG 35-02 FOR BRIDGE TYPICAL SECTION (STA 16+98.50 TO STA 19+90.50)

PAVEMENT MATERIAL SCHEDULE	
Ⓐ	RECYCLED ASPH CONC 12.5 MM SUPERPAVE, GP2 ONLY, INCL POLY-MOD BITUM MATL & H LIME (165LB/SY)
Ⓑ	RECYCLED ASPH CONC 19MM SUPERPAVE, GP1 OR GP2, INCL BITM MATL & H LIME (330LB/SY)
Ⓒ	RECYCLED ASPH CONC 25MM SUPERPAVE, GP1 OR GP2, INCL BITM MATL & H LIME (660LB/SY)
Ⓓ	14" GRADED AGGREGATE BASE
Ⓔ	8"X30" CONC. CURB & GUTTER GDOT STD 9032B, TP2
Ⓕ	RUMBLE STRIPS (SKIP)

* SLOPE CONTROL SCHEDULE		
SLOPE	CUT	FILL
4:1	0-10'	0-10'
2:1	OVER 10'	OVER 10'

NOTE:
GUARDRAIL WILL BE REQUIRED IN ALL FILL AREAS WITH SLOPES STEEPER THAN 3:1 AND HEIGHT OVER 10'.

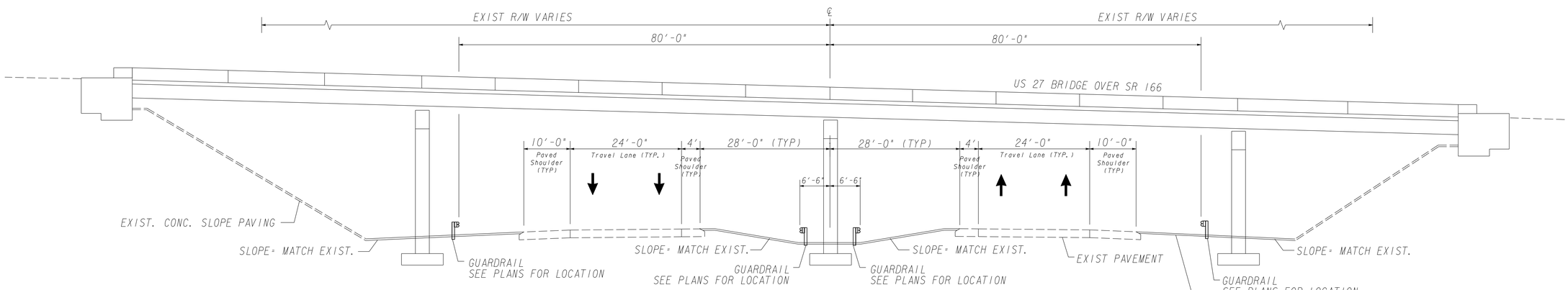

TS - 6
SR 166
STA 133+21.00 TO STA 136+92.00

AECOM

SCALE: NTS

REVISION DATES		

STATE OF GEORGIA
DEPARTMENT OF TRANSPORTATION
OFFICE: PROGRAM DELIVERY

TYPICAL SECTIONS

SR 1/US 27 @ SR 166
INTERCHANGE RECONSTRUCTION
PI: 621990

DRAWING No. 5-03