STATE	PROJECT NUMBER	SHEET NO.	TOTAL SHEETS
GA.	HPPNH-0012-01(085)	888	1149

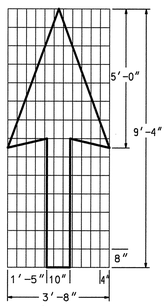

PAVEMENT MARKING, ARROW, TYPE 1
WHITE
(12.0 SQ. FT.)

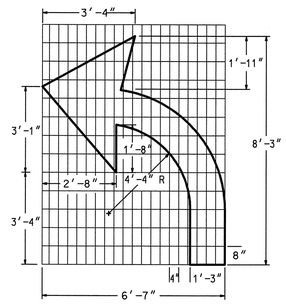

PAVEMENT MARKING, ARROW, TYPE 2
WHITE
(16.0 SQ. FT.)

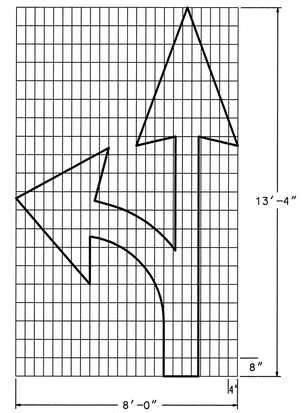

PAVEMENT MARKING, ARROW, TYPE 3
WHITE
(28.5 SQ. FT.)

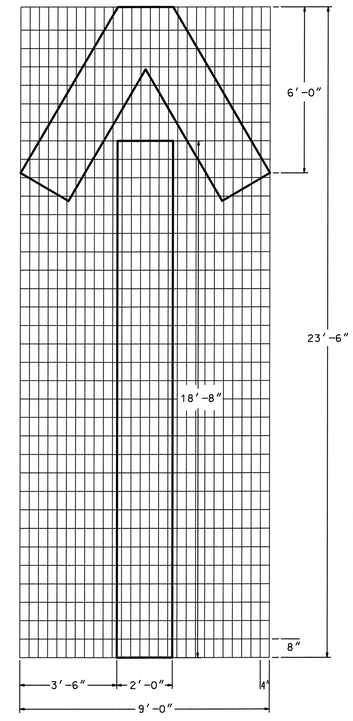

PAVEMENT MARKING, ARROW, TYPE 4
WHITE
(64.5 SQ. FT.)

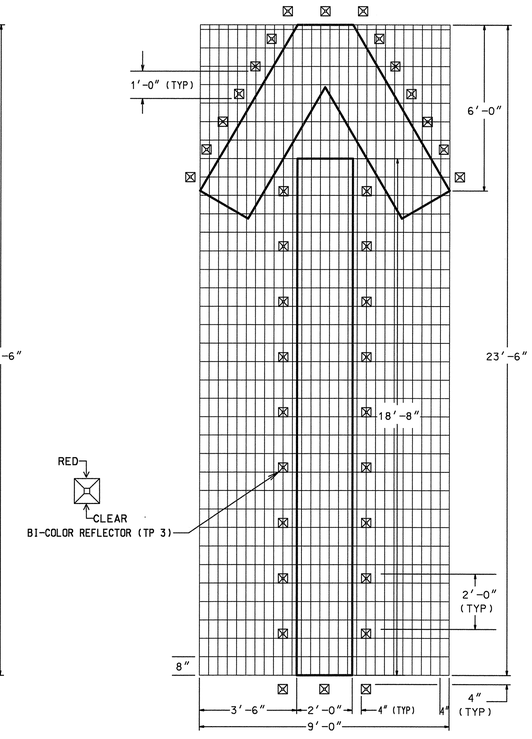

PAVEMENT MARKING, ARROW, WRONG WAY
WHITE
(64.5 SQ. FT.)

ARROW- WHITE REFLECTORIZED PAINT THERMOPLASTIC, AS SPECIFIED BY GEORGIA STANDARD SPECIFICATIONS, SECTION 655.

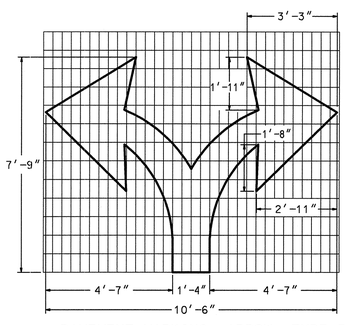

PAVEMENT MARKING, ARROW, TYPE 5
WHITE
(25.5 SQ. FT.)

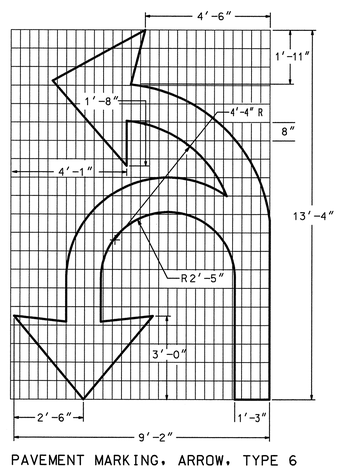

PAVEMENT MARKING, ARROW, TYPE 6
WHITE
(42.0 SQ. FT.)

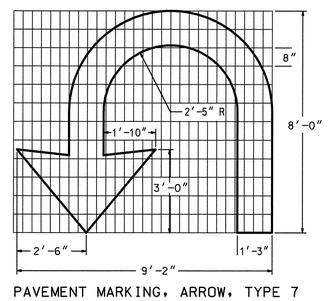

PAVEMENT MARKING, ARROW, TYPE 7
WHITE
(26.0 SQ. FT.)

DATE	REVISIONS
4-11-00	CHANGED LOCATION OF RPMs ON WRONG WAY ARROW

GEORGIA DEPARTMENT OF TRANSPORTATION
OFFICE OF TRAFFIC SAFETY & DESIGN

DETAILS OF
PAVEMENT MARKINGS-ARROWS

NO SCALE JANUARY 2000

PCBDT.B
...\12bdetail.dgn Jul 03, 2003 16:10:16