STATE	PROJECT NUMBER	SHEET NO.	TOTAL SHEETS
GA.	HPPNH-0012-01(085)	802	1146

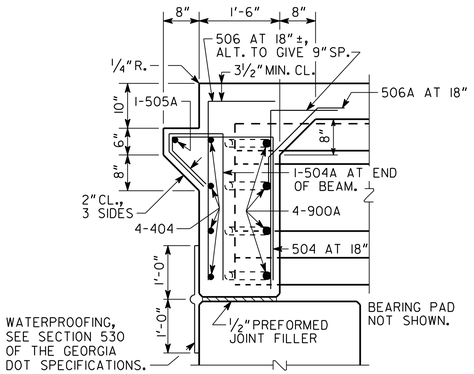

SLAB REINFORCEMENT NOT SHOWN.

SECTION AT ENDWALL

BENT 1 SHOWN
BENT 4 SIMILAR
(INTERIOR BEAMS)
SCALE: 3/4" = 1'-0"

MAINTAIN 2" CLEARANCE ON ALL REINFORCEMENT UNLESS OTHERWISE NOTED.

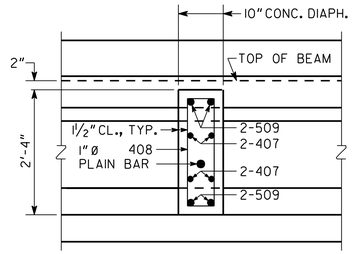

SLAB REINFORCEMENT NOT SHOWN.

SECTION THRU DIAPHRAGM

SPAN 1 & SPAN 3
SCALE: 3/4" = 1'-0"

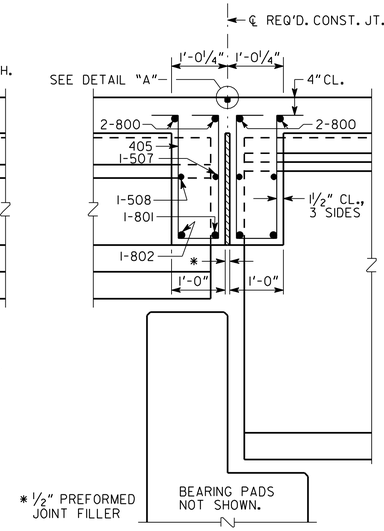

SLAB REINFORCEMENT NOT SHOWN.

SECTION THRU EDGE BEAM - BENT 2

SCALE: 3/4" = 1'-0"

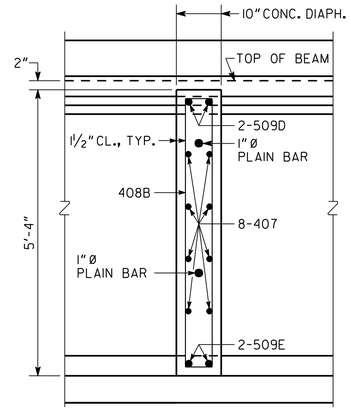

SLAB REINFORCEMENT NOT SHOWN.

SECTION THRU DIAPHRAGM

SPAN 2
SCALE: 3/4" = 1'-0"

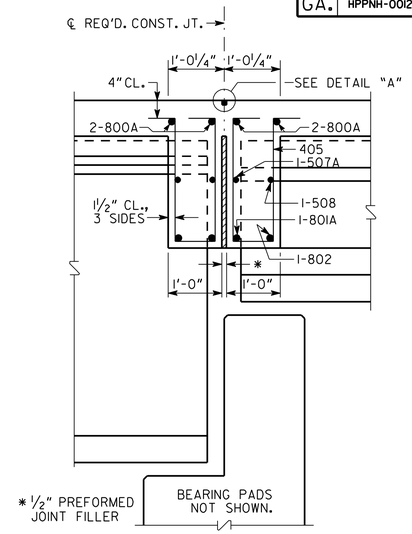

SLAB REINFORCEMENT NOT SHOWN.

SECTION THRU EDGE BEAM - BENT 3

SCALE: 3/4" = 1'-0"

* TAPERS TO 0" AT END POST

** AT CONTRACTOR'S OPTION, 10" RADIUS MAY BE REPLACED BY STRAIGHT INTERSECTING SLOPES.

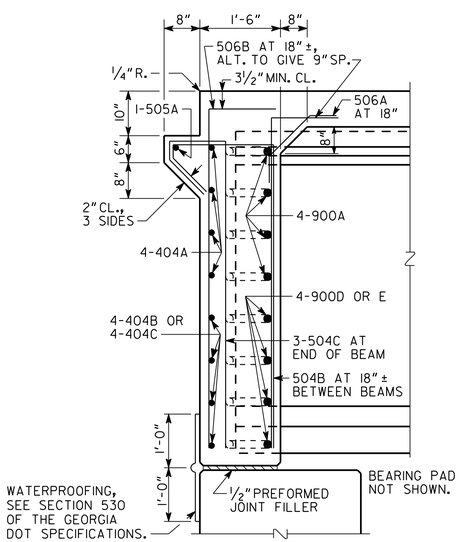

SLAB REINFORCEMENT NOT SHOWN.

SECTION AT ENDWALL - BENT 1

(EXTERIOR BEAMS)
SCALE: 3/4" = 1'-0"

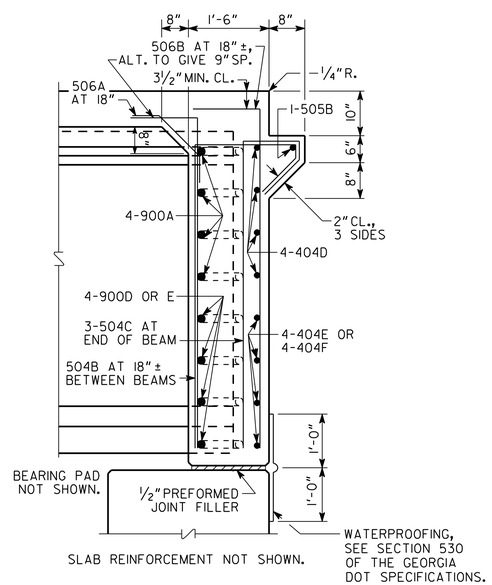

SLAB REINFORCEMENT NOT SHOWN.

SECTION AT ENDWALL - BENT 4

(EXTERIOR BEAMS)
SCALE: 3/4" = 1'-0"

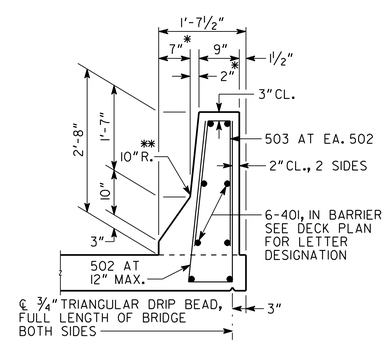

BARRIER DETAIL

SCALE: 3/4" = 1'-0"

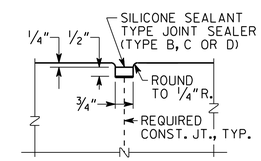

DETAIL "A"

NO SCALE

BRIDGE NO. 6 RT.

GEORGIA
DEPARTMENT OF TRANSPORTATION
PRECONSTRUCTION DIVISION-OFFICE OF BRIDGE DESIGN

JORDAN JONES & GOULDING

35.107

DATE	REVISIONS	BY

SUPERSTRUCTURE DETAILS

SR 1 LOOP (WEST ROME BYPASS) OVER SR 20

FLOYD COUNTY HPPNH-0012-01(085)

SCALE: AS SHOWN AUGUST 2009

JOB NO.	BRIDGE SHEET
2077-026	10 OF 24

DESIGNED RJS CHECKED LSW/JLA REVIEWED WEI/WMD
DRAWN RAR DESIGN GROUP RAG APPROVED PVL

P:\02\02077\026\dgn\Final Br. Plans\Br.No.6 (SR 20\626606xsd11s.dgn 6:54:51 AM 4/26/2011