STATE	PROJECT NUMBER	SHEET NO.	TOTAL SHEETS
GA.	HPPNH-0012-01(085)	731	1146

VOID

DIMENSION "D" IS MEASURED FROM TOP OF SLAB TO TOP OF BEAMS AT CENTERLINE BEARING. VARY "D" BETWEEN BEARINGS TO COMPENSATE FOR DEAD LOAD DEFLECTION AND VERTICAL CURVE. MAINTAIN A CONSTANT SLAB THICKNESS OF 8¼".

"D" = 10"

MAINTAIN 2" CLEARANCE ON ALL REINFORCEMENT UNLESS OTHERWISE NOTED.

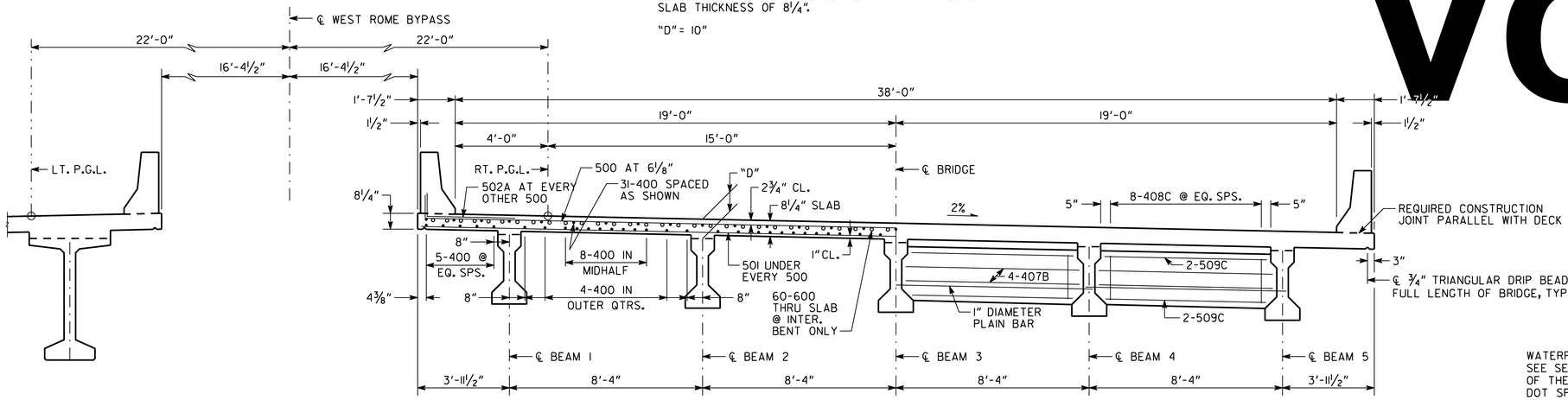

HALF SECTION THRU SLAB

SCALE: ⅜" = 1'-0"

RIGHT BRIDGE ONLY (LOOKING AHEAD)

HALF SECTION THRU DIAPHRAGM

SCALE: ⅜" = 1'-0"

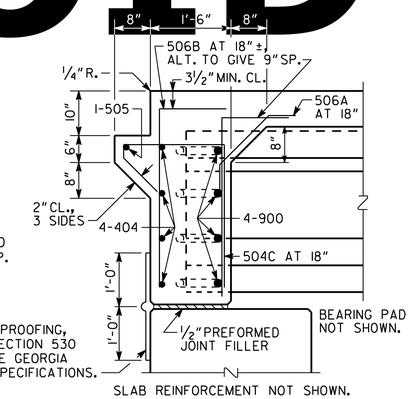

SECTION AT ENDWALL

SCALE: ¾" = 1'-0"

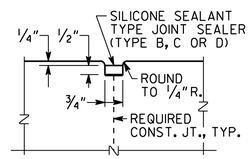

DETAIL "A"

NO SCALE

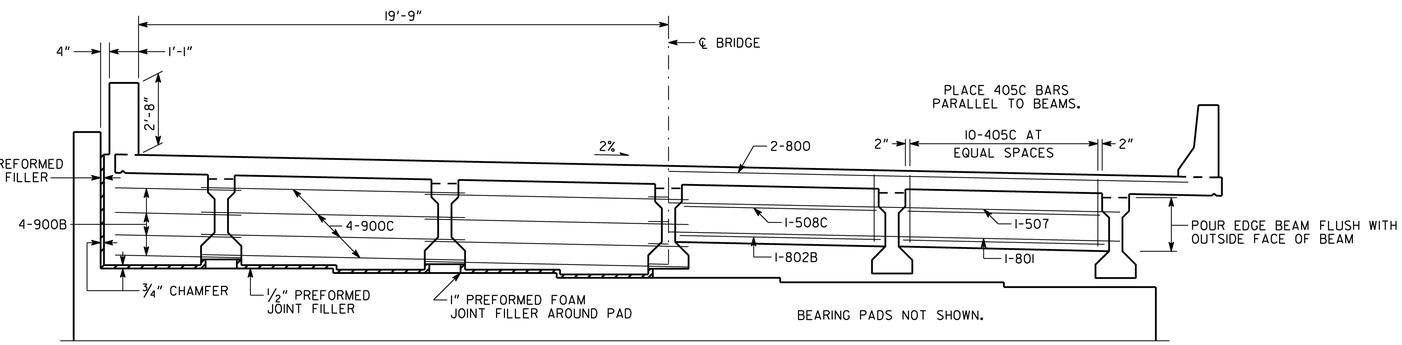

HALF SECTION THRU ENDWALL

SCALE: ⅜" = 1'-0"

RIGHT BRIDGE ONLY (LOOKING AHEAD)

HALF SECTION THRU EDGE BEAM

SCALE: ⅜" = 1'-0"

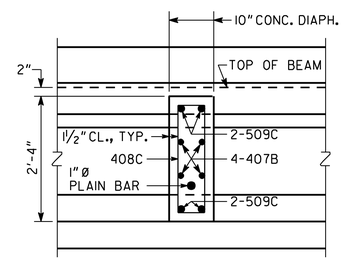

SECTION THRU DIAPHRAGM

SCALE: ¾" = 1'-0"

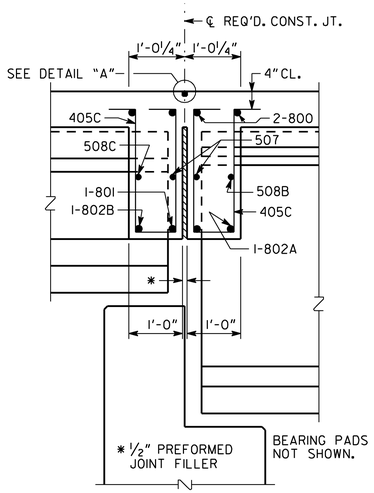

SLAB REINFORCEMENT NOT SHOWN.

SECTION THRU EDGE BEAM

SCALE: ⅜" = 1'-0"
BENTS 2 & 4

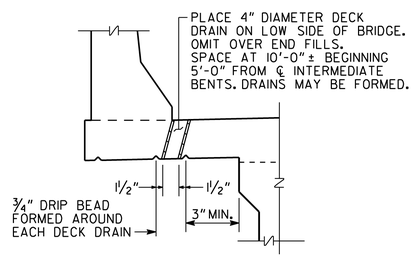

DECK DRAIN DETAIL

NO SCALE

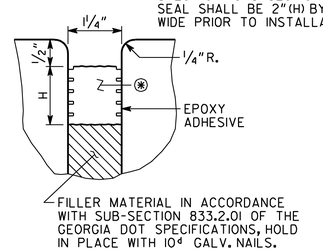

SECTION THRU JOINT AT BENTS 1 AND 5 RIGHT

NO SCALE

35.36

REVISIONS	DATE	BY

JORDAN JONES & GOULDING

JOB NO. 2077-026

BRIDGE SHEET 6 OF 19

BRIDGE NO. 3 RT.

GEORGIA
DEPARTMENT OF TRANSPORTATION
PRECONSTRUCTION DIVISION-OFFICE OF BRIDGE DESIGN

DECK SECTIONS - TYPE II PSC BEAMS
SR 1 LOOP (WEST ROME BYPASS)
OVER BEECH CREEK
FLOYD COUNTY HPPNH-0012-01(085)

SCALE: AS SHOWN AUGUST 2009

DESIGNED LSW
DRAWN RAR
CHECKED RJS/JLA
DESIGN GROUP RAG
REVIEWED WEI/WMD
APPROVED PVL

P:\02\02077\026\dgn\Final Br-Plans\Br-No.3 (Beech crk.)\62660 3x s2.dgn 5:47:32 PM 4/25/2011