STATE	PROJECT NUMBER	SHEET NO.	TOTAL SHEETS
GA.	HPPNH-0012-01(085)	703	1149

VOID

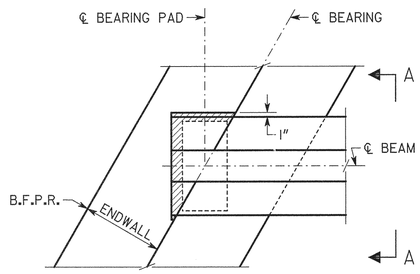

PLAN
BENT 1 SHOWN
BENT 7 SIMILAR

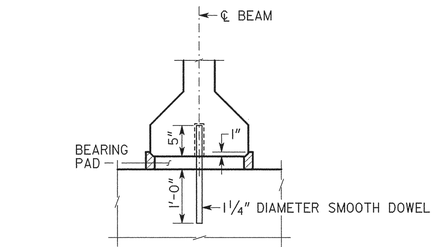

PREFORMED FOAM JOINT FILLER SHALL BE FURNISHED IN ACCORDANCE WITH SUB-SECTION 833.2.10 OF THE GEORGIA DOT SPECIFICATIONS.

ENDWALL NOT SHOWN

SECTION A-A

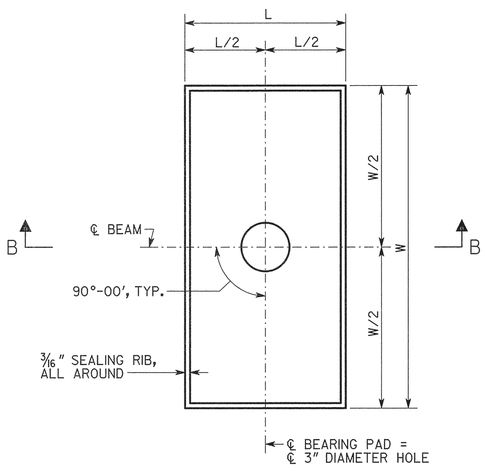

PLAN

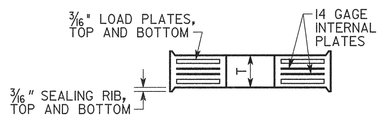

SECTION B-B

BEARING PAD

NOTES

1) BEARING PADS HAVE BEEN DESIGNED ACCORDING TO AASHTO SPECIFICATIONS DIVISION I, SECTION 14.6.6 AND SHALL BE FURNISHED IN ACCORDANCE WITH AASHTO SPECIFICATIONS DIVISION II, SECTION 18, BEARINGS.

2) 1 1/4" DIAMETER SMOOTH DOWELS SHALL BE ASTM A 709 GRADE 36.

3) BEARING PADS SHALL BE MADE OF 60 DUROMETER HARDNESS NEOPRENE, GRADE 2 OR HIGHER.

4) 3" DIAMETER HOLE IN BEARING PADS MAY BE FORMED OR DRILLED.

5) BEARING PADS SHALL HAVE 1/4" COVER ON THE TOP, BOTTOM, AND SIDES AND AROUND THE HOLE.

6) 3/16" LOAD PLATES AND 14 GAGE INTERNAL PLATE(S) (IF REQUIRED) SHALL BE ASTM A 709 GRADE 36 OR ASTM A 1011 GRADE 36.

7) NUMBER OF INTERNAL PLATES SHOWN FOR ILLUSTRATION PURPOSES ONLY. THE NUMBER OF INTERNAL PLATE(S) SPECIFIED SHALL BE EQUALLY SPACED BETWEEN LOAD PLATES.

8) USE OF 1 1/2° MOLD DRAFT IS OPTIONAL.

BENT	BEARING PADS								
							DESIGN LOADS (KIPS)		
	W	L	T	NUMBER OF LOAD PLATE(S)	NUMBER OF INTERNAL PLATE(S)	DESIGN SHEAR DEFLECTION	DEAD LOAD	LIVE LOAD (NO IMPACT)	DEAD LOAD + LIVE LOAD
1, 3, 5 & 7	24	10	1 1/2	2	1	0.454	108.3	54.1	162.4
2, 4 & 6	24	10	7/8	2	0	0	103.3	54.1	157.4

BRIDGE NO. 1 RT.

GEORGIA
DEPARTMENT OF TRANSPORTATION
PRECONSTRUCTION DIVISION-OFFICE OF BRIDGE DESIGN

BEARING DETAILS
S.R. 1 LOOP (WEST ROME BYPASS)
OVER COOSA RIVER
FLOYD CO. HPPNH-0012-01(085)

NO SCALE APRIL 2008

DATE | REVISIONS | BY

BRIDGE SHEET 8 OF 13

DESIGNED JLM | CHECKED RAG | REVIEWED WEI/WMD
DRAWN EMM | DESIGN GROUP RAG | APPROVED PVL

B621660A.DGN

REVISED DECEMBER 15, 2000