VOID

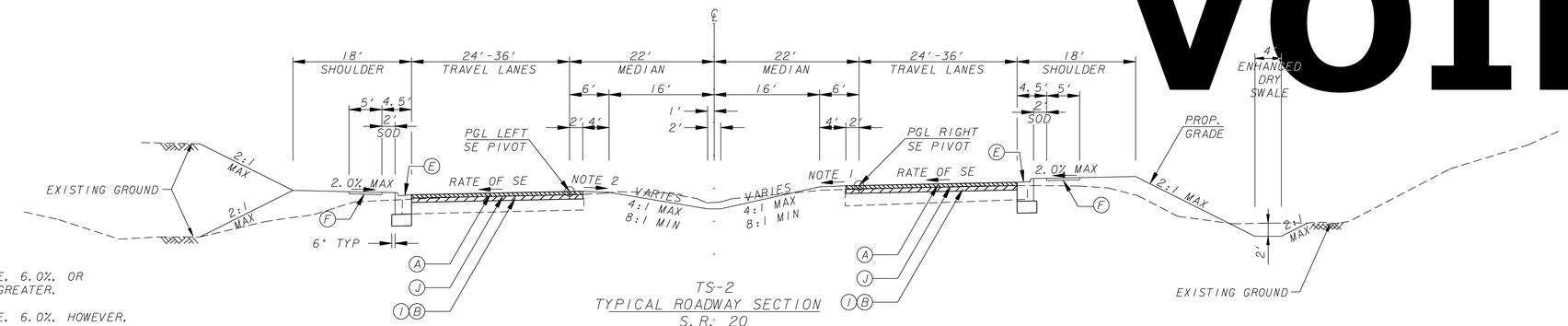

NOTES:

1. SHOULDER TO SLOPE AT NORMAL RATE. 6.0%. OR SUPERELEVATION RATE. WHICHEVER IS GREATER.

2. SHOULDER TO SLOPE AT NORMAL RATE. 6.0%. HOWEVER. THE ALGEBRAIC DIFFERENCE IN PAVING SLOPE AND SHOULDER SLOPE SHALL NOT EXCEED 8.0%. MINIMUM SHOULDER SLOPE TO BE 2.0%.

3. PAVEMENT EDGE TREATMENT SHALL BE COMPLETED PER GDOT DETAIL P-7.

TS-2
TYPICAL ROADWAY SECTION
S.R. 20
SUPERELEVATED SECTION
STA. 126+00 TO STA. 135+50
SEE ROADWAY PLANS FOR SUPERELEVATED RATES AND TRANSITIONS
NOTE-NO NORMAL CROWN SECTION THROUGH THIS STATION RANGE

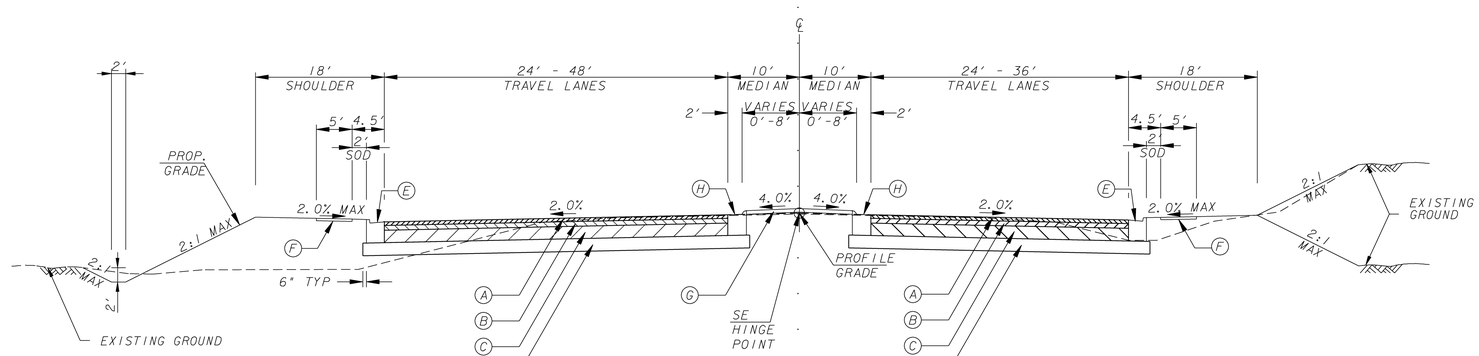

TS-3A
TYPICAL ROADWAY SECTION
U.S. 411/S.R. 61
NORMAL CROWN SECTION
STA. 287+00 TO STA. 306+60

PAVEMENT DESIGN

- (A) RECYCLED ASPH CONC 12.5 MM SUPERPAVE. GP 2 ONLY. INCL POLYMER-MODIFIED BITUM MATL & H LIME. 165 #/SY
- (B) RECYCLED ASPH CONC 19 MM SUPERPAVE. GP 1 OR 2. INCL BITUM MATL & H LIME. 220 #/SY
- (C) RECYCLED ASPH CONC 25 MM SUPERPAVE. GP 1 OR 2. INCL BITUM MATL & H LIME. 880 #/SY
- (D) GR AGGR BASE CRS. 12 INCH. INCL MATL
- (E) CONC CURB & GUTTER. 8 IN X 30 IN. TP 2
- (F) CONC SIDEWALK. 4 IN
- (G) CONCRETE MEDIAN. 6 IN
- (H) CONC CURB & GUTTER. 8 IN X 30 IN. TP 7
- (I) MILL ASPH CONC PVMT. 2 IN DEPTH
- (J) RECYCLED ASPH CONC LEVELING. INCL BITUM MATL & H LIME
- (L) PVMT REINF FABRIC STRIPS. TP 2. 18 INCH WIDE

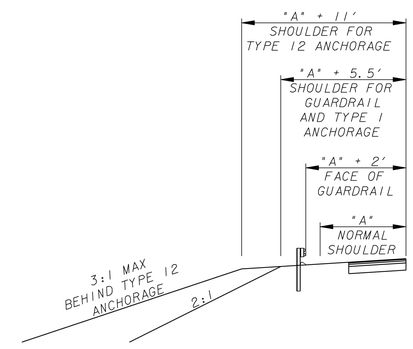

SHOULDER SECTION W/ GUARDRAIL

JORDAN JONES & GOULDING

REVISION DATES		

STATE OF GEORGIA
DEPARTMENT OF TRANSPORTATION
OFFICE: DISTRICT 6

TYPICAL SECTIONS

S.R. 20 WIDENING

DRAWING No. 5-02

GPLN