STATE	PROJECT NUMBER	SHEET NO.	TOTAL SHEETS
GA.		458	604

CONCRETE TO PE OR PVC SIDE DRAIN OR CROSS DRAIN CONNECTION ALTERNATES

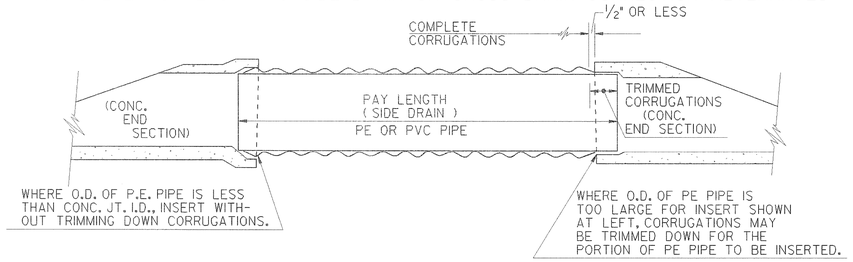

*METAL TO PE OR PVC SIDE DRAIN CONNECTION ALTERNATES

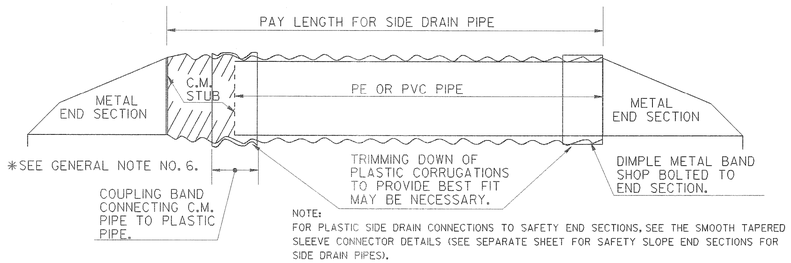

NOTE:
FOR PLASTIC SIDE DRAIN CONNECTIONS TO SAFETY END SECTIONS, SEE THE SMOOTH TAPERED SLEEVE CONNECTOR DETAILS (SEE SEPARATE SHEET FOR SAFETY SLOPE END SECTIONS FOR SIDE DRAIN PIPES).

CROSS DRAIN TO PE OR PVC SLOPE DRAIN CONNECTION

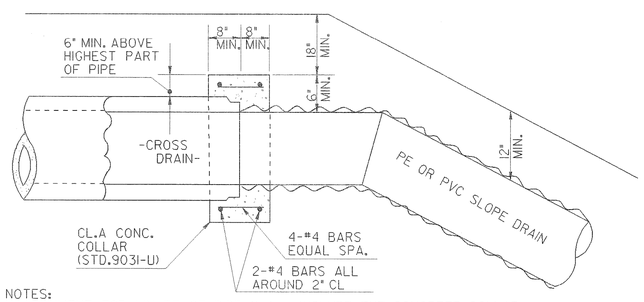

NOTES:
PAYMENT FOR LIN. FT. OF PIPE SHALL INCLUDE THE CONCRETE COLLAR. CONCRETE COLLARS ARE ALSO PERMITTED FOR SIDE DRAIN CONNECTIONS. CONNECTIONS SHOWN AT LEFT FOR SIDE DRAIN ARE NOT PERMITTED FOR SLOPE DRAIN CONNECTIONS.

PE AND PVC LONGITUDINAL PIPE TRENCH INSTALLATIONS

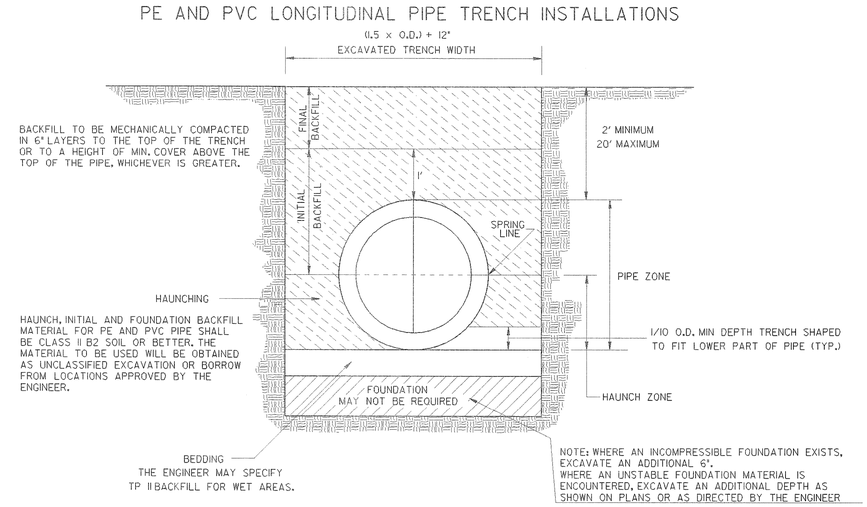

MULTIPLE PIPE SPACING: A CLEAR SPACE EQUAL TO TWO TIMES THE INSIDE DIAMETER, OR 6 FT., WHICHEVER IS LESSER SHALL BE REQUIRED BETWEEN MULTIPLE LINES OF PE OR PVC PIPE.

NOTE:
CONCRETE SECTIONS MUST HAVE GROOVE OR BELL TYPE JOINT TO ACCOMMODATE PE OR PVC PIPE CONNECTIONS

PE OR PVC PIPE SHALL BE INSERTED INTO FULL DEPTH OF JOINT IN CONCRETE SECTION AND VOID FILLED WITH BITUMINOUS PLASTIC CEMENT OR PRE-FORMED PLASTIC GASKET. (SEC.848)

PE Corrugated Pipes (AASHTO M 294)

Nominal Size (in.)	Min. I. D. (in.)	Max. O. D. (in.)	Min. A (in.^{2}/ft)	Min. C (in.)	Min. I (in.^{4}/in)
12	11.8	14.7	1.50	0.35	0.024
15	14.8	18.0	1.91	0.45	0.053
18	17.7	21.5	2.34	0.50	0.062
24	23.6	28.7	3.14	0.65	0.116
30	29.5	36.4	3.92	0.75	0.163
36	35.5	42.5	4.50	0.90	0.222
42	41.5	48.0	4.69	1.11	0.343
48	47.5	55.0	5.15	1.15	0.543

Profile Wall PVC Pipes (AASHTO M 304)

Nominal Size (in.)	Min. I. D. (in.)	Max. O. D. (in.)	Min. A (in.^{2}/ft)	Min. C (in.)	Min. I (in.^{4}/in) Cell Class 12454C	Min. I (in.^{4}/in) Cell Class 12364C
12	11.7	13.6	1.20	0.15	0.004	0.003
15	14.3	16.5	1.30	0.17	0.006	0.005
18	17.5	20.0	1.60	0.18	0.009	0.008
21	20.6	23.0	1.80	0.21	0.012	0.011
24	23.4	26.0	1.95	0.23	0.016	0.015
30	29.4	32.8	2.30	0.27	0.024	0.020
36	35.3	39.5	2.60	0.31	0.035	0.031
42	41.3	46.0	2.90	0.34	0.047	0.043
48	47.3	52.0	3.16	0.37	0.061	0.056

Corrugated Smooth Interior PVC Pipes (ASTM F 949)

Nominal Size (in.)	Min. I. D. (in.)	Max. O. D. (in.)	Min. A (in.^{2}/ft)	Min. C (in.)	Min. I Cell Class 12454C (in.^{4}/in.)
12	11.82	12.8	1.591	0.33	0.00568
15	14.34	15.66	1.884	0.405	0.01040
18	17.55	19.15	2.503	0.493	0.01860
21	20.69	22.59	2.868	0.586	0.02880
24	23.47	25.58	3.36	0.654	0.04190
30	29.47	32.15	4.104	0.824	0.08360
36	35.475	38.74	4.931	1.007	0.1461

Minimum Properties for PVC Design

Initial Minimum Tensile Strength (psi)	Initial Minimum Mod. of Elast. (psi)	50 - Year Minimum Tensile Strength (psi)	50 - Year Minimum Mod. of Elast. (psi)
7,000	400,000	3,700	140,000

Minimum cell class, ASTM D 1784, 12454C
Allowable long-term strain = 5%

OR

Initial Minimum Tensile Strength (psi)	Initial Minimum Mod. of Elast. (psi)	50 - Year Minimum Tensile Strength (psi)	50 - Year Minimum Mod. of Elast. (psi)
6,000	440,000	2,600	158,400

Minimum cell class, ASTM D 1784, 12364C
Allowable long-term strain = 3.5%

Mechanical Properties for PE Design

Initial Minimum Tensile Strength (psi)	Initial Minimum Mod. of Elast. (psi)	50 - Year Minimum Tensile Strength (psi)	50 - Year Minimum Mod. of Elast. (psi)
3,000	110,000	900	22,000

Minimum cell class, ASTM D 3350, 335420C
Allowable long-term strain = 5%

GENERAL NOTES:

1. SPECIFICATIONS: GEORGIA STANDARD, CURRENT EDITION & SUPPLEMENTS THERETO.
2. THE MINIMUM COVER SHALL BE 24" FOR SIDE DRAINS AND 12" FOR SLOPE DRAIN PIPE.
3. THE MAXIMUM HEIGHT OF FILL SHALL BE 20 FEET.
4. THE INSIDE DIAMETER SHALL BE 12", 15", 18", 24", 30", 36", 42" AND 48".
5. MINIMUM PIPE STIFFNESS SHALL BE IN ACCORDANCE WITH AASHTO M 294, TYPE "S" FOR PE PIPE, AASHTO M 304 FOR PROFILE WALL PVC PIPE AND ASTM F 949 FOR CORRUGATED SMOOTH INTERIOR PVC PIPE.
6. METAL FLARED END SECTIONS PER STD. 1120 ARE PERMITTED ONLY WHERE THE PLANS LIST PLAIN CORRUGATED STEEL PIPE AS AN ALLOWABLE ALTERNATE FOR THE CULVERT.
7. GRADED AGGREGATE USED FOR STRUCTURAL BACKFILL WILL NOT BE PAID FOR SEPARATELY. PAYMENT WILL BE INCLUDED IN THE OVERALL PRICE BID FOR PIPE.

SPECIAL NOTES:

PE AND PVC PIPE ARE ALLOWABLE ONLY FOR THE FOLLOWING CONDITIONS:

A. BOTH PE AND PVC PIPE MAY BE USED AS AN ALTERNATE TO LONGITUDINAL PIPE UNDER ALLOWABLE FILL SHOWN AND FOR NON-INTERSTATE AND NON-TRAFFIC BEARING APPLICATIONS.
B. PE PIPE MAY BE USED AS AN ALTERNATE TO PERFORATED UNDERDRAIN PIPE.
C. PE AND PVC PIPE MAY BE USED AS AN ALTERNATE FOR CROSS DRAINS WHEN THE DESIGN YEAR ADT IS EQUAL TO OR LESS THAN 15,000.
D. PE AND PVC PIPE ARE ALLOWABLE IN ALL SIDE DRAIN AND SLOPE DRAIN APPLICATIONS.

PE AND PVC CROSS DRAIN PIPE TRENCH INSTALLATIONS

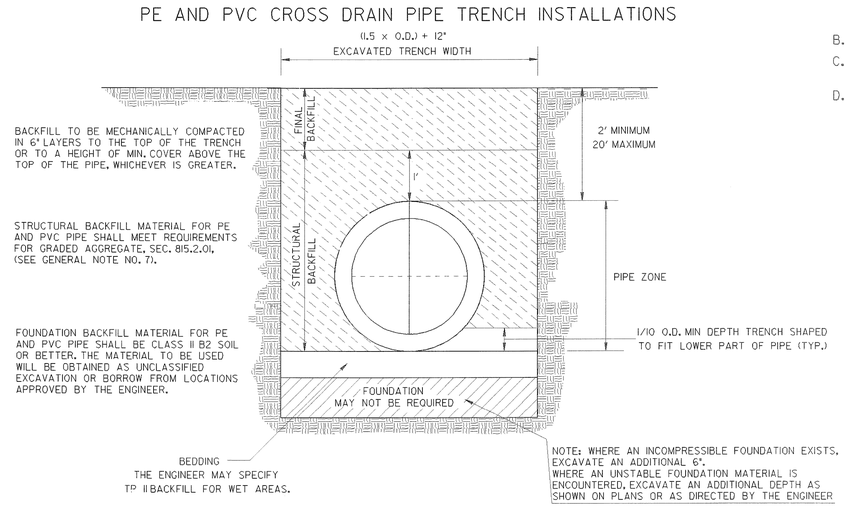

DATE	DEPARTMENT OF TRANSPORTATION STATE OF GEORGIA	
REVISION	STANDARD CORRUGATED SMOOTH LINED POLYETHYLENE PIPE (PE) AND POLYVINYL CHLORIDE PIPE (PVC)	
	NO SCALE — REVISED AND REDRAWN JUNE, 2010	
BY	DESIGNED ____ TRACED ____ DRAWN M.A.B. CHECKED G.L.O. (SUBMITTED) STATE DESIGN POLICY ENGINEER (APPROVED) CHIEF ENGINEER	NUMBER 1030P

9/17/2010 3:47:38 PM \\DOT-DSN\GOP\OFUCE\DO RIGBOND.pct cowans V:\GARY\Revised 1030P\1030P.pct