STATE	PROJECT NUMBER	SHEET NO.	TOTAL SHEETS
GA.	NHSTP-0075-03(203)	373	604

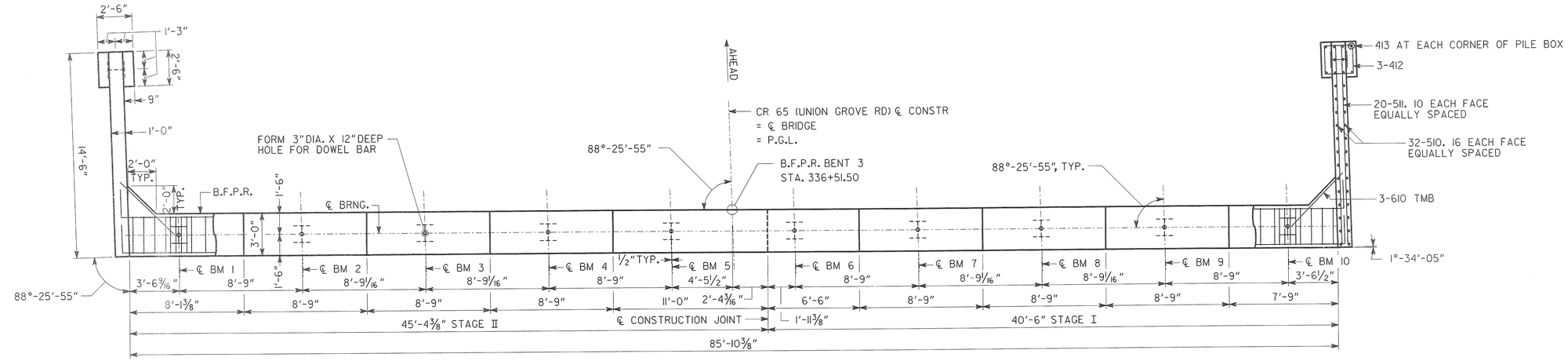

PLAN

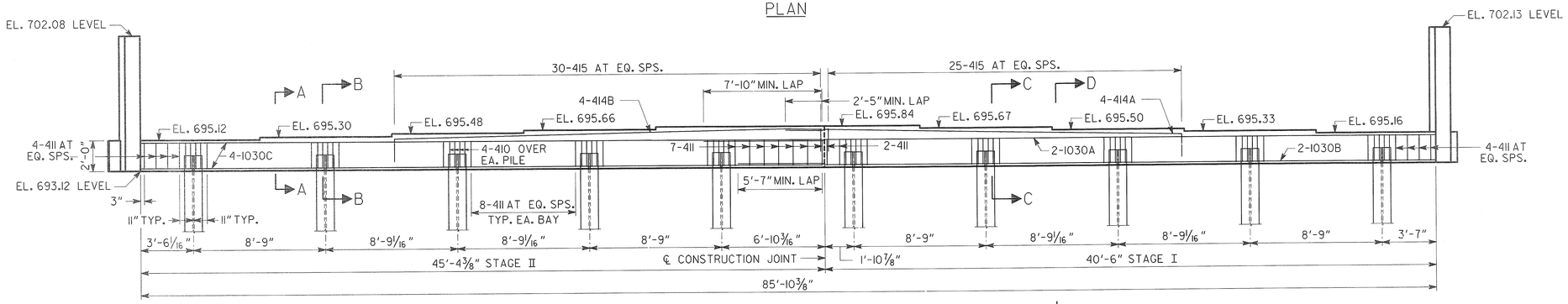

ELEVATION
(LOOKING AHEAD)

NOTES:

1. POUR WINGWALLS MONOLITHICALLY WITH CAP.
2. MAINTAIN 2" CL. ON ALL REINFORCEMENT UNLESS OTHERWISE NOTED.
3. SEE GA STD. 9037 FOR DRAINAGE DETAILS AT END BENTS.

WINGWALL PILES NOT SHOWN

ALL PILES SHALL BE STEEL H, HP 14 X 89

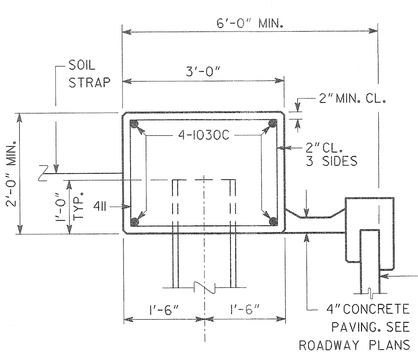

SECTION A-A
NO SCALE

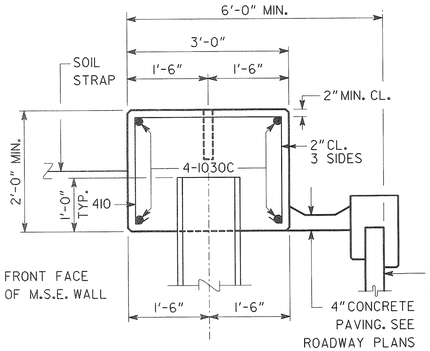

SECTION B-B
NO SCALE

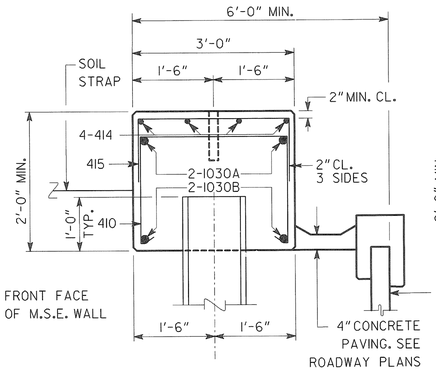

SECTION C-C
NO SCALE

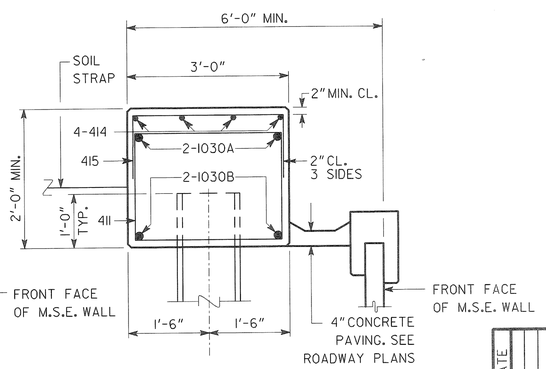

SECTION D-D
NO SCALE

PLAN DRIVING OBJECTIVE

DRIVE ALL PILES TO A DRIVING RESISTANCE OF 105 TONS AFTER THE FOLLOWING MINIMUM TIP ELEVATIONS ARE ACHIEVED:

BENT	ELEVATION
3 LEFT (STAGE II)	645
3 RIGHT (STAGE I)	645

SUBSTRUCTURE QUANTITIES

ITEM	BENT 3
CU YD CLASS "AA" CONCRETE	33.2
LB BAR REINFORCEMENT STEEL	3994

BRIDGE NO. 1

Heath & Lineback Engineers
INCORPORATED
2390 CANTON ROAD, BUILDING 200
MARIETTA, GEORGIA 30066-5393
(770)424-1668

GEORGIA
DEPARTMENT OF TRANSPORTATION
ENGINEERING DIVISION-OFFICE OF BRIDGES AND STRUCTURES

END BENT 3 DETAILS
CR 65 (UNION GROVE ROAD) OVER I-75
GORDON COUNTY NHSTP-0075-03(203)

SCALE: 1/4" = 1'-0" FEBRUARY 2011

DRAWING NO. 35 - 12
BRIDGE SHEET 12 OF 15

REVISIONS | BY | DATE

DESIGNED JRL | CHECKED BKA / MS | REVIEWED W.E.I./W.M.D.
DRAWN JRL | DESIGN GROUP EJC | APPROVED BFR

1 INCH WHEN PRINTED FULL SIZE

J:\2008030\2008030005-006\BRIDGE\UGR\UGR B13.DGN