| STATE | PROJECT NUMBER | SHEET NO. | TOTAL SHEETS |
|---|---|---|---|
| GA. | NHSTP-0075-03(203) | 388 | 604 |

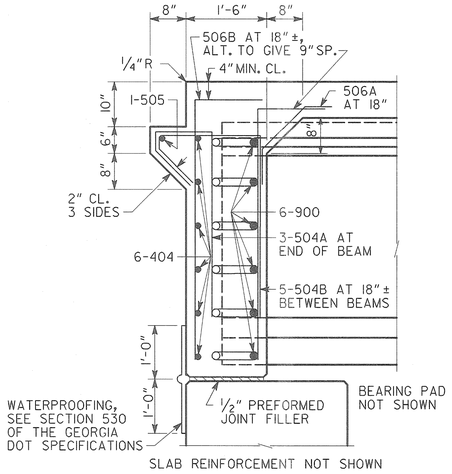


SECTION AT ENDWALL

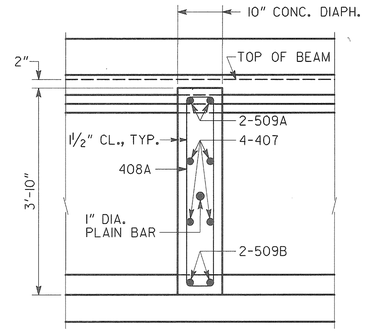


SLAB REINFORCEMENT NOT SHOWN

SECTION THRU DIAPHRAGM

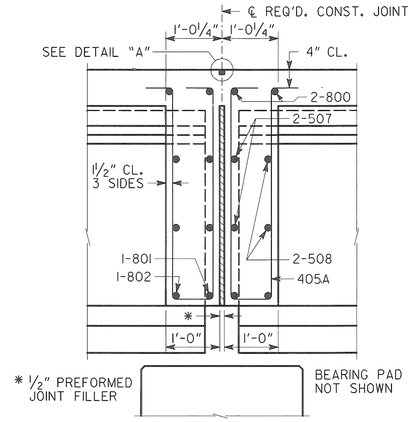


SLAB REINFORCEMENT NOT SHOWN

SECTION THRU EDGE BEAM

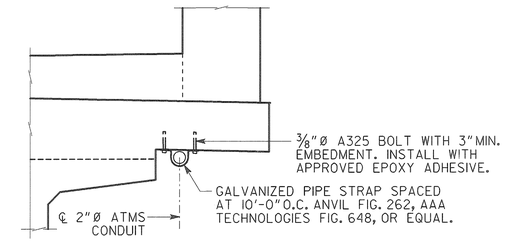


△2 ATMS CONDUIT DETAIL

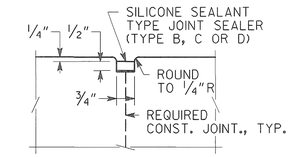


DETAIL "A"

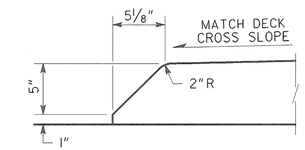


CURB FACE DETAIL

FENCE NOTES:

1. FENCE SHALL BE 9 GAGE CHAIN LINK ZINC COATED TWO INCH SECURITY FENCE.
2. CAST 4" DIA. GALVANIZED SLEEVE IN THE PARAPET. ALLOW NON-SHRINK GROUT TO CURE FOR THREE DAYS BEFORE FENCE FABRIC IS INSTALLED.
3. APPLY GALVANIZING REPAIR COMPOUND, IN ACCORDANCE WITH GEORGIA DOT SPECIFICATION 645, TO ENDS OF 4" DIA. GALVANIZED SLEEVES.
4. PROVIDE EXPANSION SLEEVE FOR ALL RAILS TO MATCH SUPERSTRUCTURE JOINTS.
5. FOR POST SPACING, SEE BRIDGE SHEET 4.
6. FOR FURTHER DETAILS, SEE GEORGIA DOT SPECIFICATIONS SECTIONS 643 AND 894.
7. FASTEN FABRIC TO POSTS AT INTERVALS NOT GREATER THAN 14".

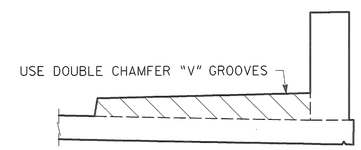


CONST. JOINT DETAIL AT SIDEWALK AND PARAPET

PLACE TRANSVERSE MARKINGS SPACED AT 5'-0"±.

COST OF BOND BREAKER AND EPOXY ADHESIVE TO BE INCLUDED IN PRICE BID FOR SUPERSTRUCTURE ITEMS.

* MATCH DECK SLOPE

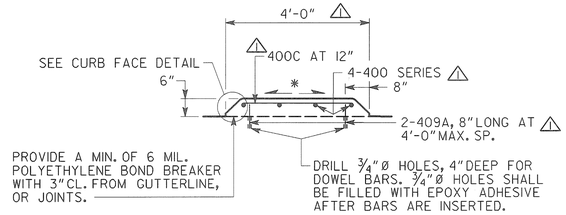


CONCRETE MEDIAN DETAILS

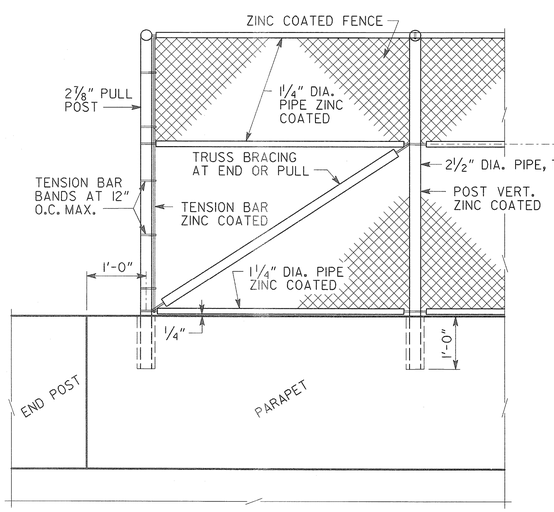


FENCE ELEVATION

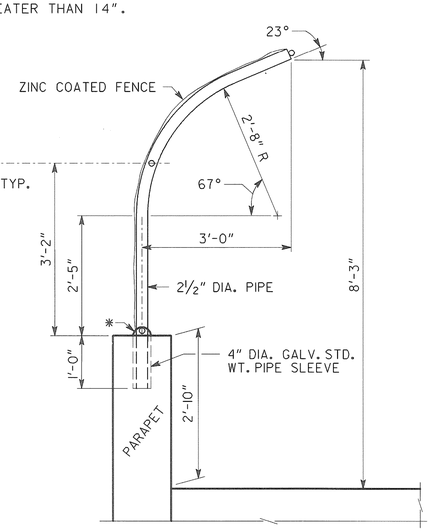


FENCE POST DETAIL

* NON-SHRINK PORTLAND CEMENT GROUT, TROWEL TO PROVIDE POSITIVE DRAINAGE.

PLACE TRANSVERSE SIDEWALK MARKINGS ON SIDEWALK SPACED AT 5'-0"±.

INCLUDE COST OF BOND BREAKER AND EPOXY ADHESIVE IN PRICE BID FOR SUPERSTRUCTURE ITEMS.

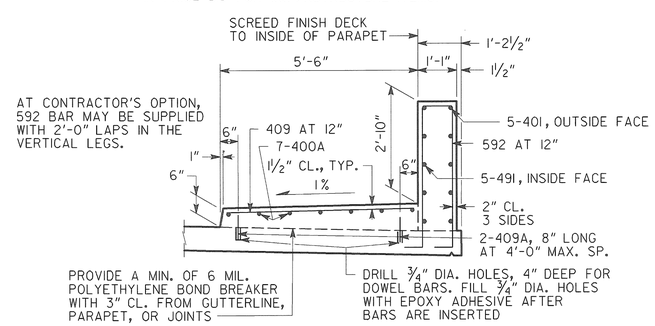


SIDEWALK AND PARAPET DETAILS FOR FENCE ATTACHMENT

BRIDGE NO. 1


Heath & Lineback Engineers
INCORPORATED
2390 CANTON ROAD, BUILDING 200
MARIETTA, GEORGIA 30066-5393
(770)424-1668


GEORGIA
DEPARTMENT OF TRANSPORTATION
ENGINEERING DIVISION-OFFICE OF BRIDGES AND STRUCTURES

| REVISIONS | BY | DATE |
|---|---|---|
| MEDIAN | JRL | 10-01-11 |
| ATMS CONDUIT | KAK | 10-11-11 |

# MISCELLANEOUS DETAILS
## CR 65 (UNION GROVE ROAD) OVER I-75

GORDON COUNTY — NHSTP-0075-03(203)

NO SCALE — FEBRUARY 2011

| DRAWING NO. | DESIGNED JRL | CHECKED BKA / MS | REVIEWED W.E.I./W.M.D. |
|---|---|---|---|
| 35 - 07 | DRAWN JRL | DESIGN GROUP EJC | APPROVED BFR |
| BRIDGE SHEET 7 OF 15 | | | |

1 INCH WHEN PRINTED FULL SIZE

J:\ 20080030 \ 20080300005-006 \ BRIDGE \ UGR1 \ UGR MD.DGN