STATE	PROJECT NUMBER	SHEET NO.	TOTAL SHEETS
GA	STP00-5005-00(004)	11	282

RIGHT TURN LANE TYPICAL SECTIONS SR 292

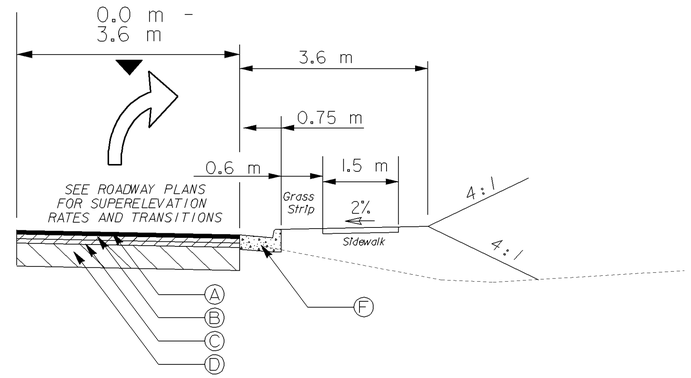

APPLIES TO STA. 4+076.56 TO STA. 4+237.91 RT.
APPLIES TO STA. 4+355.86 TO STA. 4+842.21 LT.

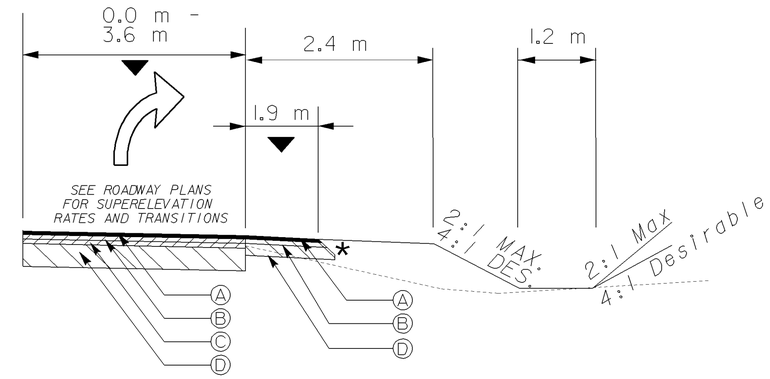

APPLIES TO STA. 1+926.08 TO STA. 2+035.72 LT.
APPLIES TO STA. 2+097.03 TO STA. 2+262.01 RT.
APPLIES TO STA. 2+159.49 TO STA. 2+314.91 LT.
APPLIES TO STA. 2+370.47 TO STA. 2+536.17 RT.
APPLIES TO STA. 2+433.40 TO STA. 2+589.31 LT.
APPLIES TO STA. 2+828.53 TO STA. 2+971.06 RT.
APPLIES TO STA. 3+437.76 TO STA. 3+529.87 LT.
APPLIES TO STA. 3+773.67 TO STA. 3+873.00 RT.

REQUIRED PAVEMENT SECTION

- (A) 9.5 mm ASPH. CONC. SUPERPAVE, 75 kg/m²
- (B) 19.0 mm ASPH. CONC. SUPERPAVE, 120 kg/m²
- (C) 25.0 mm ASPH. CONC. SUPERPAVE, 240 kg/m²
- (D) GRADED AGGREGATE BASE 200 mm
- (E) ASPH. CONC. LEVELING INCL. BITUM. MAT'L. & H LIME, AS REQ'D
- (F) 200mm x 762mm CONC. CURB & GUTTER GA. STD. 9032B, TYPE 2
- (G) MILL ASPH. CONC. PAVING, VARIABLE DEPTH
- ★ SAFETY EDGE PLACEMENT PER GDOT CONSTRUCTION DETAIL P-7

TYPICAL SECTION #11 WILSON ROAD

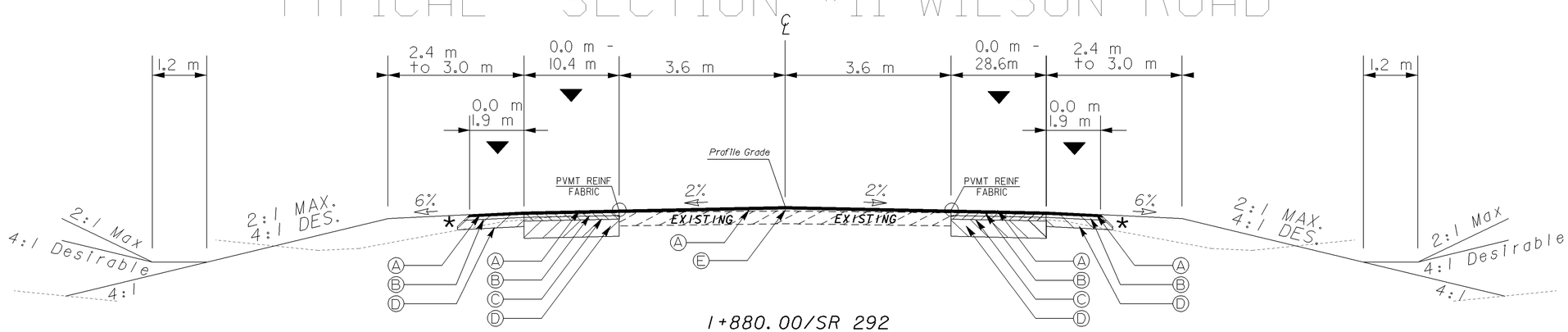

1+880.00/SR 292

TANGENT SECTION

APPLIES TO STA. 2+920.00 TO STA. 2+981.49

▼ PAY AREA FOR GRADED AGGREGATE BASE

USE ON CONSTRUCTION

REVISION DATES		
12-20-13		

GEORGIA
DEPARTMENT OF TRANSPORTATION

NOT TO SCALE

STATE OF GEORGIA
DEPARTMENT OF TRANSPORTATION
OFFICE: DISTRICT 5 ROAD DESIGN

TYPICAL SECTIONS

PROJECT STP00-5005-00(004)
COUNTY: MONTGOMERY/TOOMBS
DATE 12-12-12 SH 6 OF 10

DRAWING No. 05-006

1/5/2009 GPLN