12/11/2013 Wed Dec 11 11:40:54 2013 kstewart	\\gdot-dsn1\gocfg\resources\Gdot-2012.tbl	J:\DESIGN\Projects Let\550610\IA 550610 FILES FOR CONTRACTOR for CD\DGN plans\50610typ.dgn	STATE	PROJECT NUMBER	SHEET NO.	TOTAL SHEETS
			GA	STP00-5005-00(004)	9	282

TYPICAL SECTION # 7 SR 292

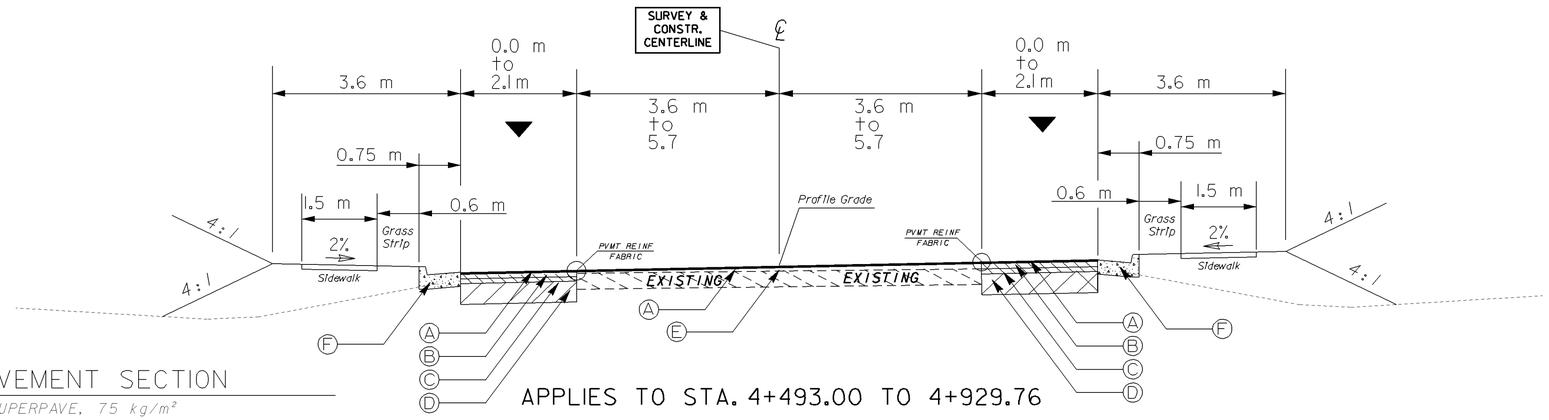

REQUIRED PAVEMENT SECTION

- (A) 9.5 mm ASPH. CONC. SUPERPAVE, 75 kg/m²
- (B) 19.0 mm ASPH. CONC. SUPERPAVE, 120 kg/m²
- (C) 25.0 mm ASPH. CONC. SUPERPAVE, 240 kg/m²
- (D) GRADED AGGREGATE BASE 200 mm
- (E) ASPH. CONC. LEVELING INCL. BITUM. MAT'L. & H LIME, AS REQ'D
- (F) 200mm x 762mm CONC. CURB & GUTTER GA. STD. 9032B, TYPE 2
- (G) MILL ASPH. CONC. PAVING, VARIABLE DEPTH
- ★ SAFETY EDGE PLACEMENT PER GDOT CONSTRUCTION DETAIL P-7

APPLIES TO STA. 4+493.00 TO 4+929.76

SUPER ELEVATED SECTION

SLOPE = RATE OF SUPERELEVATION
SEE ROADWAY PLANS FOR SUPERELEVATION
RATES AND TRANSITIONS

TYPICAL SECTION # 8 SR 292

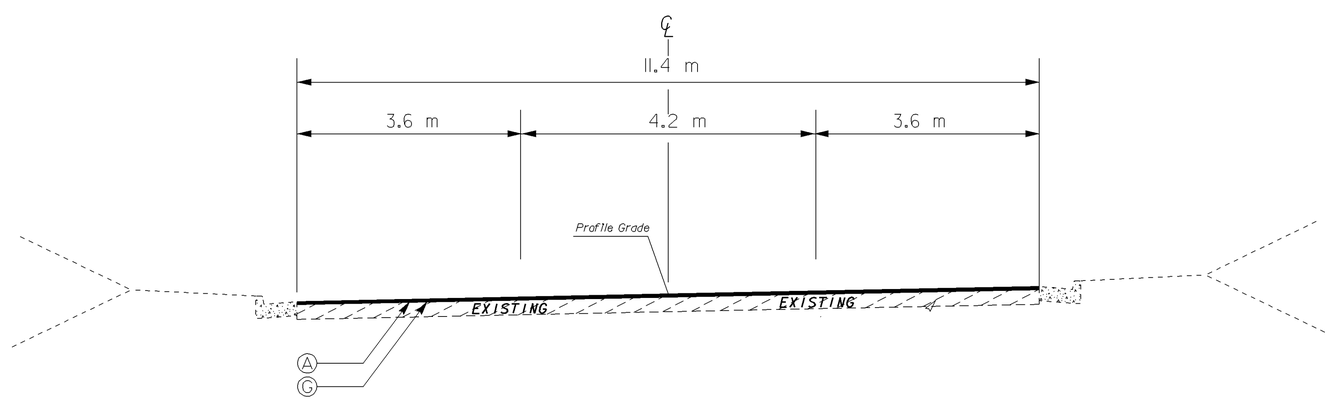

APPLIES TO STA. 4+929.76 TO 4+953.87

SUPER ELEVATED SECTION

SLOPE = RATE OF SUPERELEVATION
SEE ROADWAY PLANS FOR SUPERELEVATION
RATES AND TRANSITIONS

▼ PAY AREA FOR GRADED AGGREGATE BASE

USE ON CONSTRUCTION

GEORGIA
DEPARTMENT OF TRANSPORTATION

NOT TO SCALE

REVISION DATES		
12-20-13		

STATE OF GEORGIA
DEPARTMENT OF TRANSPORTATION
OFFICE: DISTRICT 5 ROAD DESIGN

TYPICAL SECTIONS

PROJECT STP00-5005-00(004)
COUNTY: MONTGOMERY/TOOMBS
DATE 12-12-12 SH 4 OF 10

DRAWING No. 05-004

1/5/2009 GPLN