STATE	PROJECT NUMBER	SHEET NO.	TOTAL SHEETS
GA.	STP00-2610-00(004)	260	352

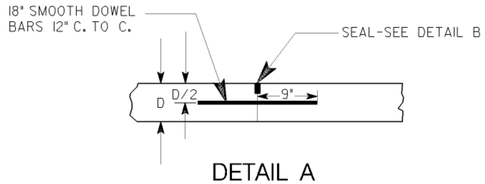

DETAIL A
TRANSVERSE CONSTRUCTION OR SAWED CONTRACTION JOINTS

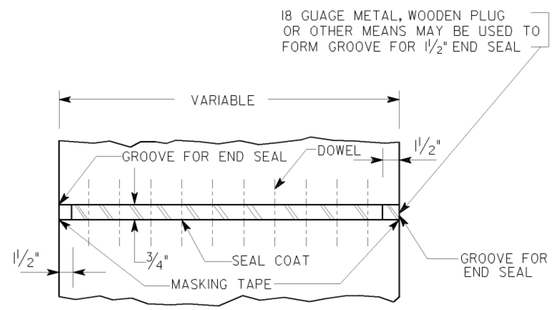

DETAIL C
PLAN OF TRANSVERSE EXPANSION JOINT BETWEEN PAVEMENT AND BRIDGE APPROACH SLAB

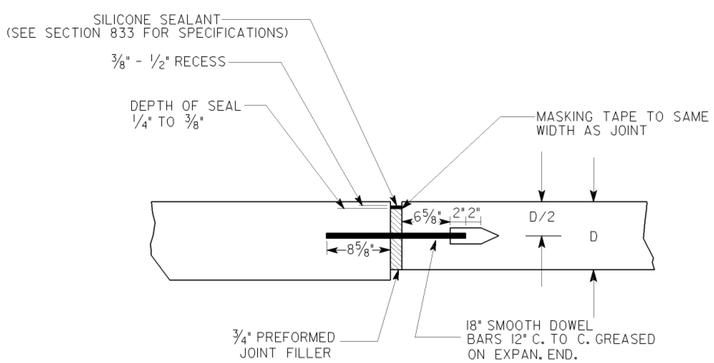

DETAIL D
EXPANSION JOINT

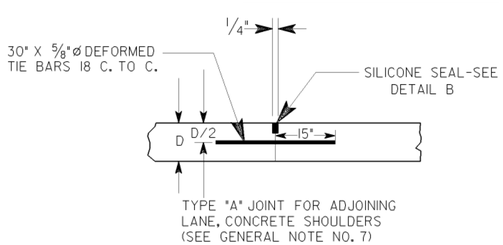

DETAIL E
ADJOINING LANES, CONCRETE SHOULDER, LONGITUDINAL SAWED OR FORMED JOINTS

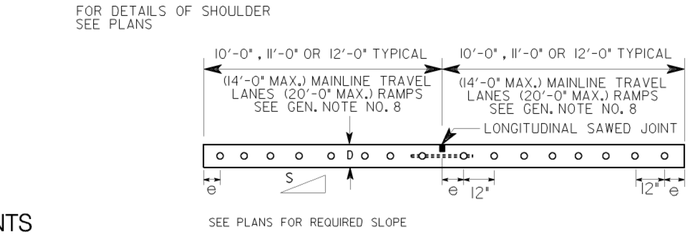

SEE PLANS FOR REQUIRED SLOPE

UNIFORM THICKNESS DOWELED PORTLAND CEMENT CONCRETE PAVING WITH CENTER JOINT AND TIE BARS AND 90° TRANSVERSE CONTRACTION JOINTS AT 15 FT. INTERVALS

e = 6" UNLESS SPECIFIED OTHERWISE

SECTION A–A
SECTION THROUGH TRANSVERSE JOINT

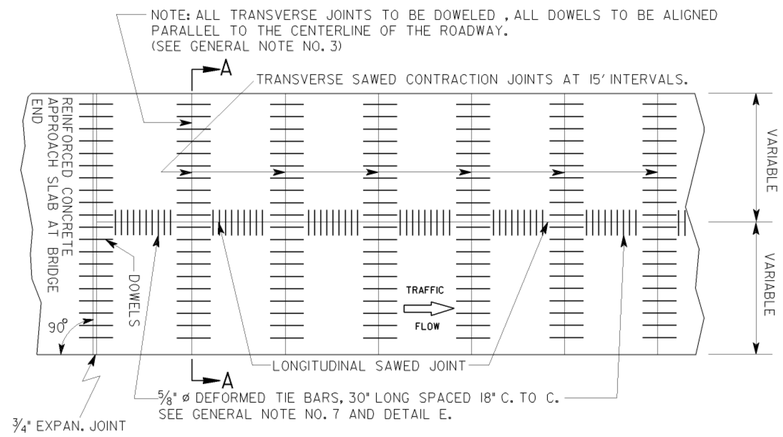

STANDARD JOINT LAYOUT

WHERE A NEW LANE WILL BE ADJOINING AN EXISTING P.C. CONCRETE PAVED LANE, THE SPACING FOR THE TRANSVERSE JOINTS IN THE NEW LANE WILL BE VARIED FROM THAT SHOWN ABOVE WHERE NECESSARY TO MATCH THE TRANSVERSE JOINTS IN THE EXISTING LANE. WHEN EXISTING PAVING JOINTS EXCEED 25 FEET IN LENGTH AN INTERMEDIATE TRANSVERSE JOINT WILL BE ESTABLISHED IN THE NEW LANE AT MID-SLAB.

REQUIRED DOWEL BAR DIAMETERS

PAVEMENT THICKNESS (D)	DOWEL BAR DIAMETERS
6"	1¼"
7"	1¼"
8"	1¼"
9"	1¼"
10"	1½"
11"	1½"
12"	1½"

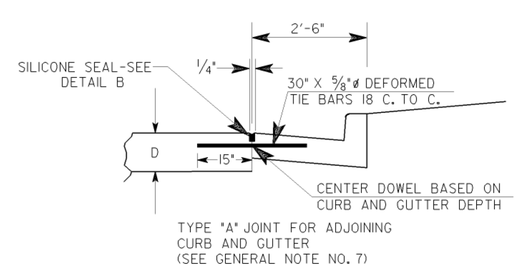

DETAIL F
ADJOINING CURB AND GUTTER

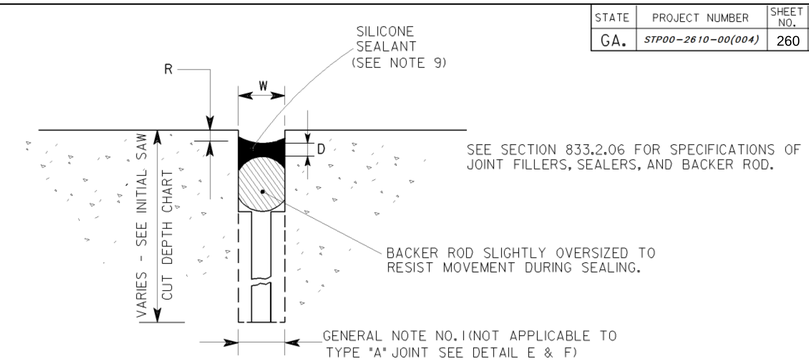

DETAIL B
CONTRACTION OR CONSTRUCTION JOINT

JOINT SCHEDULE			
TYPE	W	D	R
TRANSVERSE JOINT	¼"	¼"-⅜"	⅜" TO ½"
℄ LONGITUDINAL SAWED JOINT	¼"	¼"-⅜"	⅜" TO ½"
JOINT FOR ADJOINING LANE FOR TYPE "A" JOINT	¼"	¼"-⅜"	⅜" TO ½"

REQUIRED MINIMUM DEPTH OF INITIAL SAW CUT FOR LONGITUDINAL AND TRANSVERSE JOINTS. ALL INITIAL CUTS TO BE ⅛" IN WIDTH.

DEPTH OF PAVEMENT D	DEPTH OF CUT
6"	1⅞"
7"	2"
8"	2¼"
8½"	2⅜"
9"	2½"
10"	2¾"
11"	3"
12"	3¼"

GENERAL NOTES:

1. THE LOCATION OF THE INITIAL SAW CUT MAY VARY BETWEEN THESE LINES.
2. CONTRACTION JOINT FOR CONCRETE SHOULDERS SHALL CONFORM WITH TRANSVERSE SAWED CONTRACTION JOINT IN MAINLINE PAVEMENT.
3. TRANSVERSE JOINTS SHALL BE PERPENDICULAR TO THE CENTER LINE OF THE LANE BEING PLACED, EXCEPT WHERE NEW LANES ARE PLACED AGAINST EXISTING LANES WITH SKEWED JOINTS. THE NEW JOINTS WILL MATCH THE SKEW OF THE EXISTING PAVEMENT.
4. JOINTS IN ACCELERATION AND DECELERATION LANES ARE TO COINCIDE WITH MAINLINE JOINTS, BUT MAY BE NORMAL TO ACCELERATION OR DECELERATION EDGE.
5. GA. STD. SPECIFICATIONS (SEC. 430) FOR TOLERANCE ON DOWELS.
6. CASES WHERE CONCRETE CURB AND GUTTER IS PLACED ADJACENT TO A CONCRETE ROADWAY SLAB, THE LONGITUDINAL JOINT SHALL BE SAWED AND SEALED OF FORMED AND SEALED AS A LONGITUDINAL JOINT AS SHOWN BY THE STANDARD.
7. NO TIE BAR SHALL BE LOCATED CLOSER THAN 18" TO A TRANSVERSE JOINT. WHERE NEW CONCRETE WILL BE ADJOINING EXISTING CONCRETE, DO NOT TIE NEW CONCRETE TO EXISTING CONCRETE.
8. SPACING BETWEEN LONGITUDINAL JOINTS SHALL NOT EXCEED 14'-0" FOR MAINLINE TRAVEL LANES. RAMP PAVEMENT SECTIONS OVER 14'-0" WIDE SHALL HAVE A LONGITUDINAL SAWED JOINT ALONG THE CENTERLINE AND THE SPACING BETWEEN LONGITUDAL JOINTS SHALL NOT EXCEED 20'-0".
9. WHEN SELF LEVELING SILICONE SEALANT IS USED, TOOLING OF THE SEALANT TO OBTAIN A CONCAVE SURFACE IS NOT REQUIRED IF SEALENT MEETS DIMENSIONS OF DETAIL B.

BY	REVISION	DATE
GLO	REV. DOWELS DIA. AND TRANSVERSE JTS. SPACING	1-25-07
	AND REV. GEN. NOTE 8.	
	REV. GEN. NOTE 3, 7 & 8.	8-9-02
RMC	¼" TRANSVERSE JOINT	4-3-2000

DEPARTMENT OF TRANSPORTATION
STATE OF GEORGIA

STANDARD
JOINT DETAILS FOR PORTLAND CEMENT CONCRETE PAVING

NO SCALE — REV. & REDRAWN MAY, 1996

DES. ____ DRW. ____ TRA. ____ CHK. ____

(SUBMITTED) STATE ROAD & AIRPORT DESIGN ENGINEER

(APPROVED) CHIEF ENGINEER

NUMBER 5046H