STATE	PROJECT NUMBER	SHEET NO.	TOTAL SHEETS
GA.	STP00-2610-00(004)	258	352

GUARDRAIL LOCATION AT BRIDGE ENDS

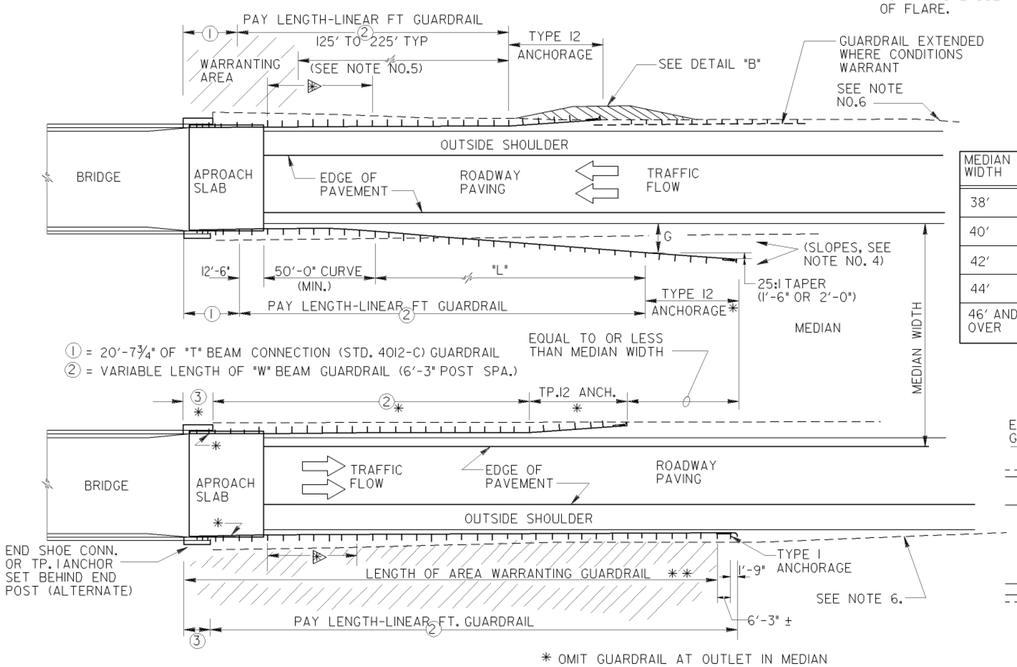

* OMIT GUARDRAIL AT OUTLET IN MEDIAN FOR MEDIAN WIDTHS OVER 54 FEET.

** OMIT GUARDRAIL AT OUTLET ON THE OUTSIDE UNLESS ROADSIDE CONDITIONS WARRANT ITS USE.

③ = 8'-1¾" OF T BEAM (END SHOE & TRANSITION SECTION) - OR TYPE 1 ANCHOR., SET BEHIND END POST & CONNECTED TO W - BEAM.

▷ WHERE THE OUTSIDE SHOULDER WIDTH IS REDUCED ACROSS BRIDGE:

a) SHORT INSTALATION (LESS THAN 200' TOTAL) OF GUARDRAIL SHALL HAVE STRAIGHT ALIGNMENT;

b) LONGER INSTALLATION SHALL BE TRANSITIONED, STARTING 33' +/- FROM BRIDGE END, TO THE "S" OFFSET PER FLARE DETAIL.

FLARE DETAIL

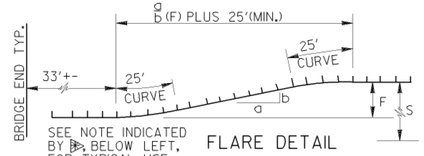

FLARE RATE	
MPH	a/b(MIN.)
70	15:1
60	13:1
50	11:1
40	9:1

MEDIAN WIDTH	G	MIN. L
38'	8'	200'
40'	10'	175'
42'	12'	150'
44'	14'	137.5'
46' AND OVER	16'	125'

NOTE:

FOR DETAILS OF GUARDRAIL PROTECTION OF FIXED OBJECTS IN THE MEDIAN, SEE STANDARD #4055. FOR DETAILS OF CONCRETE BARRIERS, SEE STANDARDS 4940, 4948, OR OTHER APPLICABLE DETAILS.

GUARDRAIL LOCATION IN FRONT OF FIXED HAZARDS

(FOR USE WHERE FIXED OBJECTS ALONG THE OUTSIDE OF THE ROADWAY ARE WITHIN THE CLEAR ZONE WIDTH AND CONCRETE SIDE BARRIER IS NOT USED)

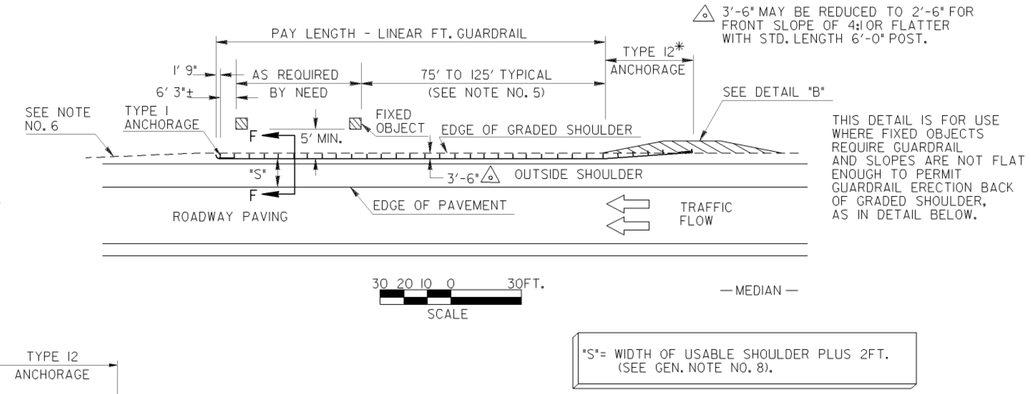

THIS DETAIL IS FOR USE WHERE FIXED OBJECTS REQUIRE GUARDRAIL AND SLOPES ARE NOT FLAT ENOUGH TO PERMIT GUARDRAIL ERECTION BACK OF GRADED SHOULDER, AS IN DETAIL BELOW.

"S"= WIDTH OF USABLE SHOULDER PLUS 2FT. (SEE GEN. NOTE NO. 8).

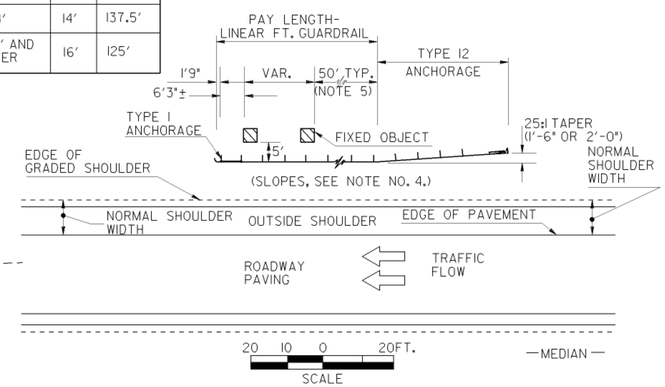

NOTE: DETAIL ABOVE APPLIES WHERE OBJECT FALLS WITHIN THE CLEAR ZONE WIDTH AND SLOPES IN FRONT OF THE OBJECT ALLOW GUARDRAIL INSTALLATION BACK OF THE GRADED SHOULDER. SEE GENERAL NOTE NO. 4.

GENERAL NOTES:

1. SPECIFICATIONS: GEORGIA STANDARD, CURRENT EDITION, & SUPPLEMENTS THERETO.
2. POST SPACINGS SHALL BE 6'-3" C. TO C. EXCEPT WHERE REDUCED SPACINGS ARE SPECIFIED AT BRIDGE ENDS OR AT FIXED HAZARDS.
3. FOR DETAILS OF GUARDRAIL, ACCESSORIES, POSTS, OFFSET BLOCKS, ANCHORAGES, ETC., SEE APPLICABLE STANDARD AND/OR CONSTRUCTION DETAILS.
4. NEGATIVE SLOPES IN FRONT OF GUARDRAIL AND TYPE 12 ANCHORAGES SHALL BE 10:1 OR FLATTER.
5. GUARDRAIL SHALL BEGIN IN ADVANCE OF A HAZARD OR HAZARDOUS AREA BY A SUFFICIENT LENGTH TO PREVENT VEHICLE PENETRATION BEHIND THE RAIL INTO PROTECTED AREA. THE TYPICAL LENGTHS OF ADVANCEMENT SHOWN MAY BE INCREASED OR DECREASED WHEN SHOWN IN THE PLANS, OR WHERE DIRECTED BY THE ENGINEER BECAUSE OF SPEED DESIGN, ROADSIDE GEOMETRICS, GRADES, SIZE OF HAZARD, OR OTHER CONDITIONS; IF FURTHER INFORMATION IS DESIRED, SEE AASHTO "ROADSIDE DESIGN GUIDE."
6. WHERE GUARDRAIL IS REQUIRED ON THE SHOULDER, THE SHOULDER WILL BE GRADED WIDER AS SHOWN IN DETAIL "B".
7. GAPS OF LESS THAN 200 FT. BETWEEN GUARDRAIL INSTALLATIONS SHOULD BE AVOIDED EXCEPT WHERE JUSTIFIED BY LOCAL CONDITIONS.
8. "S" IS THE OFFSET TO FACE OF GUARDRAIL. THIS WILL BE TWO FT. GREATER THAN THE NORMAL USABLE SHOULDER WIDTH(WITHOUT GUARDRAIL). HOWEVER, IF THE NORMAL GRADED SHOULDER WIDTH(WITHOUT GUARDRAIL) IS GREATER THAN REQUIRED BY AASHTO, "S" DISTANCE MAY BE ESTABLISHED AS TWO(2) FT. GREATER THAN THE AASHTO SHOULDER WIDTH.
9. OFFSET FROM RAIL FACE TO HAZARD FACE SHALL BE 5'+/- DESIRABLE AND 4'-3" MINIMUM. THIS OFFSET MAY BE REDUCED TO 3'-0" MIN. BY USING 3'- 1½" POST SPACINGS IN FRONT OF HAZARD WITH A MINIMUM OF 7 SUCH SPACINGS IN ADVANCE OF HAZARD.

SPECIAL NOTE:
LOCATION AND QUANTITIES GIVEN IN THE PLANS FOR GUARDRAIL AND ANCHORAGES ARE ESTIMATES MADE FROM OFFICE COMPUTATIONS. A FINAL DETERMINATION AS TO LOCATIONS AND QUANTITIES OF GUARDRAIL AND ANCHORAGES WILL BE MADE BY THE ENGINEER OR A REPRESENTATIVE FROM THE OFFICE OF TRAFFIC AND SAFETY AFTER CONSTRUCTION OF ROADWAY.

* OR APPROVED ALTERNATE, MEETING MANUAL FOR ASSESSING SAFETY HARDWARE (MASH) REQUIREMENTS

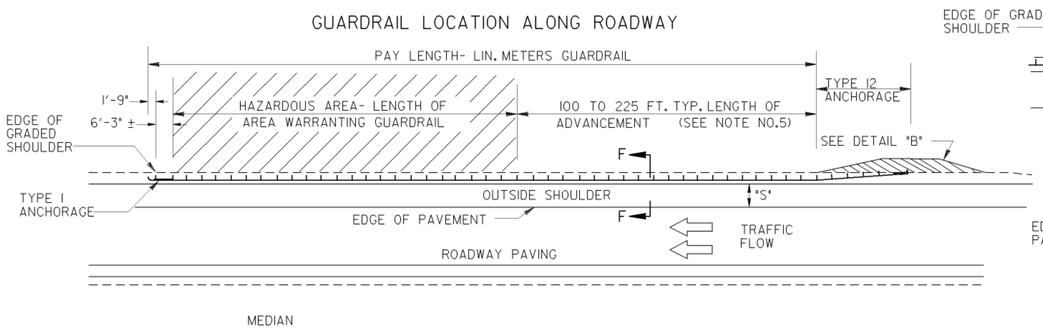

"S"= WIDTH OF USABLE SHOULDER PLUS 2 FT. (SEE GEN. NOTE NO. 8).

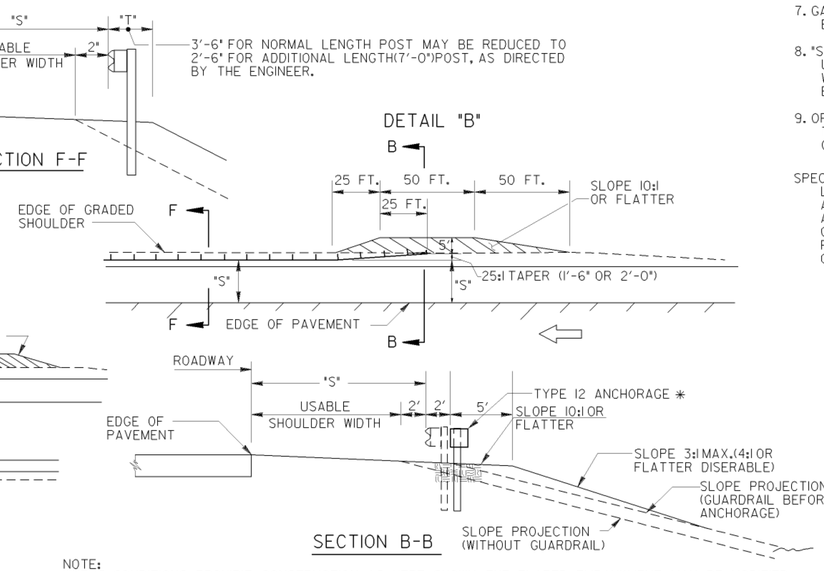

NOTE:
WHERE CONDITIONS PROHIBIT CONSTRUCTION AS HERE SHOWN, THE FLARED EMBANKMENT MAY BE MODIFIED AT THE DIRECTION OF THE ENGINEER OR AS SHOWN ON THE PLANS IN ORDER TO PROVIDE THE 10:1 OR FLATTER SLOPES AROUND THE TY. 12 ANCHORAGE & TO GIVE THE CONSTANT 31" TOP OF RAIL HEIGHT WITH A 2 FT. OFFSET AS SHOWN.

DATE	REVISION	BY
		DES. G.L.O.
		DRW. G.L.O.
		CHK. B.R.E.
		REVIEW B.A.S.

DEPARTMENT OF TRANSPORTATION
STATE OF GEORGIA

STANDARD
GUARDRAIL LOCATION DETAILS FOR MULTI-LANE DIVIDED HIGHWAYS (WITH SHOULDERS ADJACENT TO ROADWAY)
31 INCH GUARDRAIL HEIGHT

SCALE: AS SHOWN — AUGUST 2011

(SUBMITTED) STATE DESIGN POLICY ENGINEER
(APPROVED) CHIEF ENGINEER

NUMBER 4387