STATE	PROJECT NUMBER	SHEET NO.	TOTAL SHEETS
GA.	STP-4001(7)	348	585

GEORGIA REGISTERED PROFESSIONAL ENGINEER No. 19937 LARRY H. WHITE

NOT VALID UNLESS SIGNED

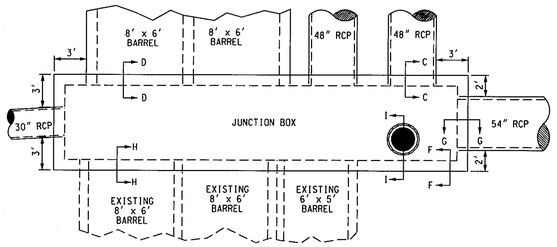

JUNCTION BOX
NTS

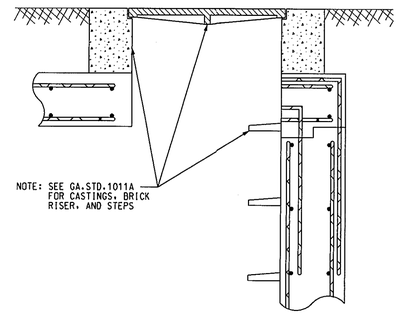

SECTION I-I
NTS

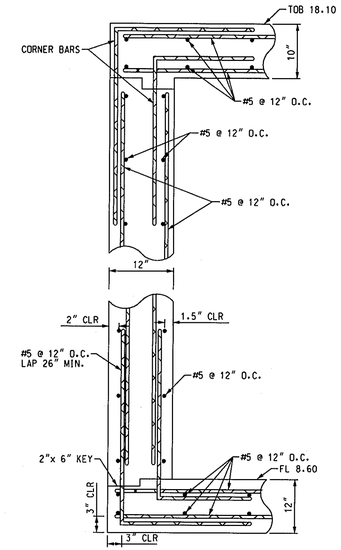

SECTION F-F
NTS

SUMMARY OF QUANTITIES	
CLASS A CONCRETE	55 CY
REINFORCING STEEL	7000 LBS

NOTE: THIS IS PROVIDED FOR INFORMATION ONLY. PAYMENT WILL BE FOR CLASS A CONCRETE INCLUDING REINFORCING STEEL.

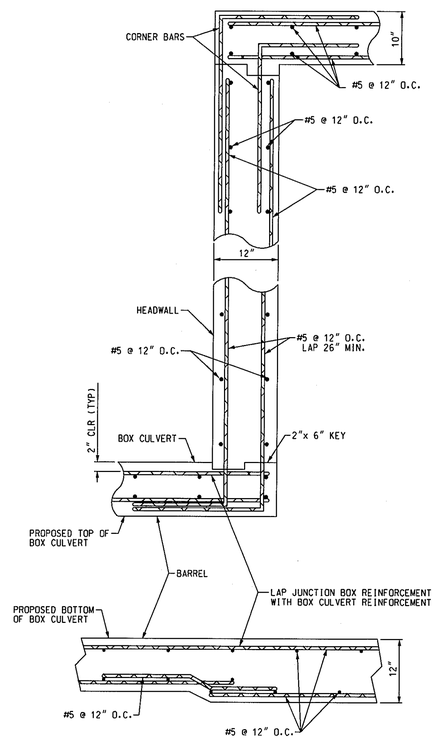

SECTION D-D
JUNCTION BOX
NTS

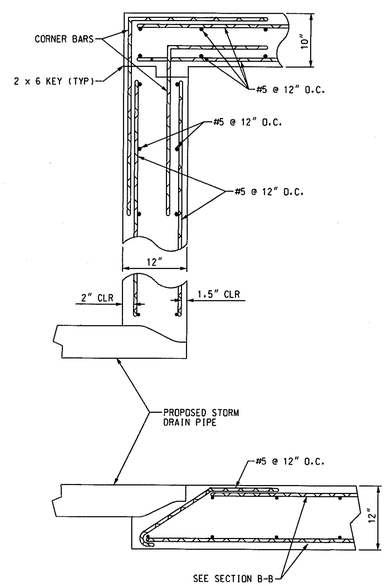

SECTION C-C
NTS

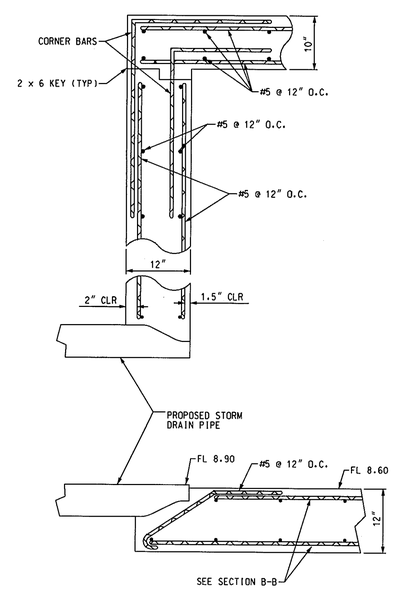

SECTION G-G
NTS

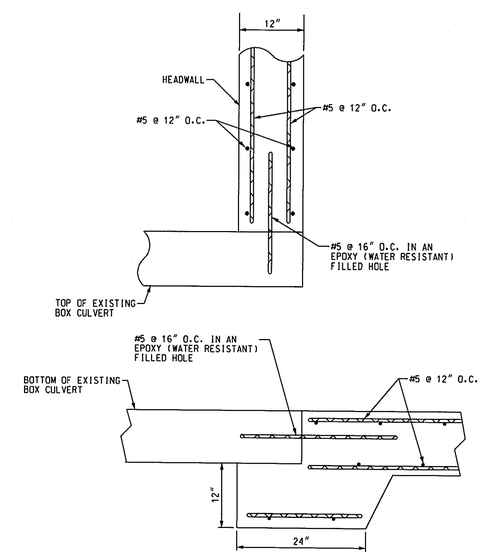

SECTION H-H
NTS

EXISTING PROPERTY LINE
REQUIRED R/W LINE
CONSTRUCTION LIMITS —·C·—·F·—
EASEMENT FOR CONSTR AND MAINT OF SLOPES
EASEMENT FOR CONSTR OF DRIVES
EASEMENT FOR CONSTR OF SLOPE

EXISTING R/W LINE
EXISTING PERPETUAL EASEMENT LINE

DATE	REVISIONS	DATE	REVISIONS

LAND LOT NO.
LAND DISTRICT
GMD 6TH

GEORGIA
DEPARTMENT OF TRANSPORTATION
SPECIAL DESIGN
JUNCTION BOX DETAILS

PROJECT STP-4001(7)
COUNTY CHATHAM COUNTY
DATE AUGUST, 2003 SH OF