STATE	PROJECT NUMBER	SHEET NO.	TOTAL SHEETS
GA.	BRST-139-1(13)	79	155

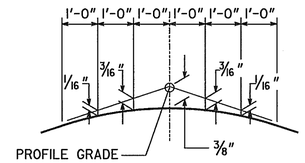

CROWN DETAIL

2.0% CROSS SLOPE
NO SCALE

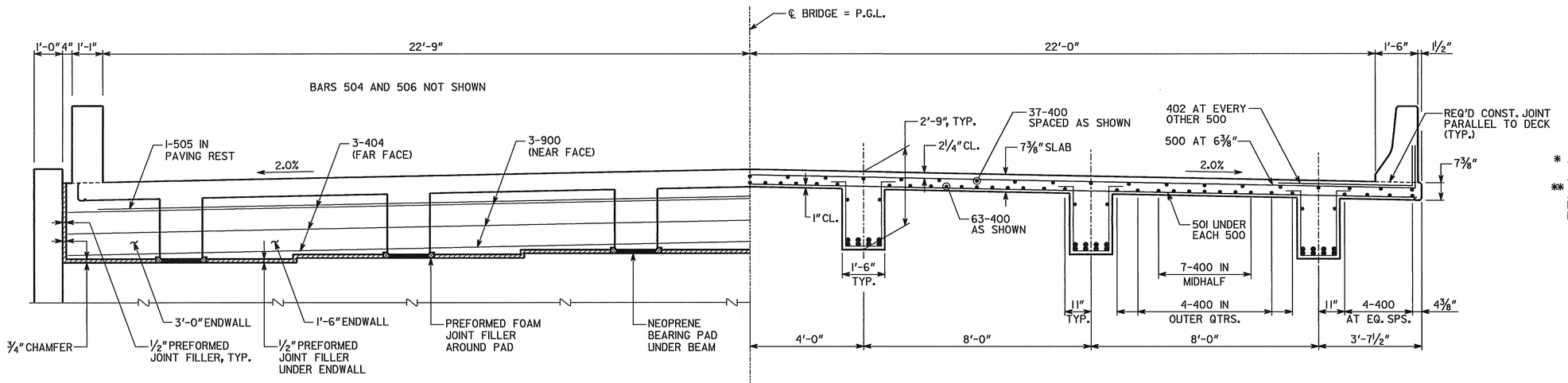

HALF SECTION AT ENDWALL

HALF SECTION THRU SLAB

* TAPERS TO 0" AT END POST

** AT CONTRACTOR'S OPTION, 10" RADIUS MAY BE REPLACED BY STRAIGHT INTERSECTING SLOPES.

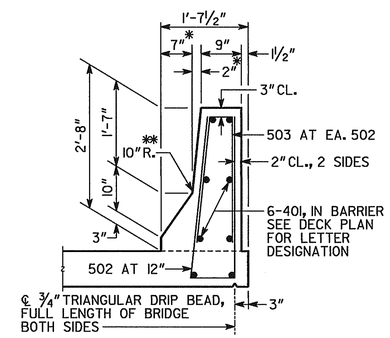

BARRIER DETAIL

NO SCALE

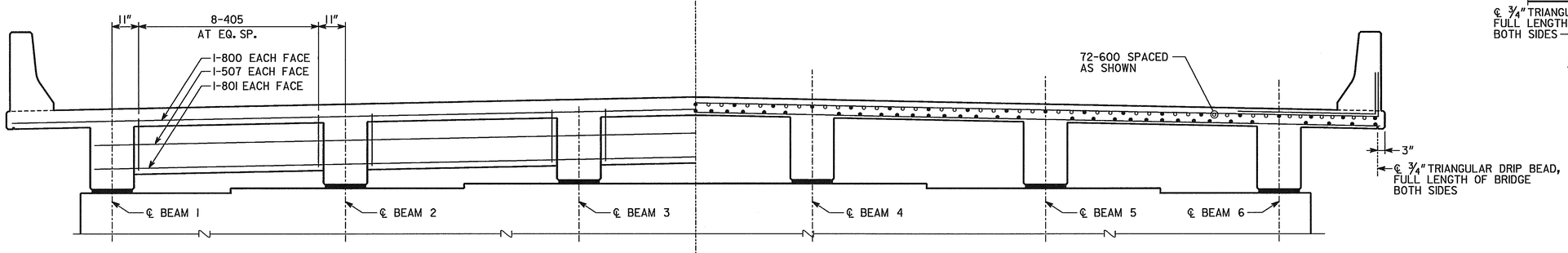

HALF SECTION AT EDGE BEAM

HALF SECTION THRU SLAB AT INTERMEDIATE BENTS

NOTE:

MAINTAIN 2" MIN. CLEARANCE TO ALL REINFORCEMENT, UNLESS NOTED.

BRIDGE NO. 1

PARSONS TRANSPORTATION GROUP
225 PEACHTREE ST., NE, SUITE 1710
ATLANTA, GA 30303

GEORGIA
DEPARTMENT OF TRANSPORTATION
PRECONSTRUCTION DIVISION-OFFICE OF BRIDGE DESIGN

DECK SECTION

SR 23(US 301) OVER BUFFALO CREEK

BRANTLEY COUNTY BRST-139-1(13)

SCALE: 1/2" = 1'-0" NOVEMBER 2004

BY	REVISIONS	DATE

BRIDGE SHEET 4 OF 10

DESIGNED JCO	CHECKED TM	REVIEWED RS
DRAWN EPR	DESIGN GROUP EJC	APPROVED PVL