STATE	PROJECT NUMBER	SHEET NO.	TOTAL SHEETS
GA	EDS00-0545-00 (014)	556e	627

WATER MAIN DETAILS

VOID

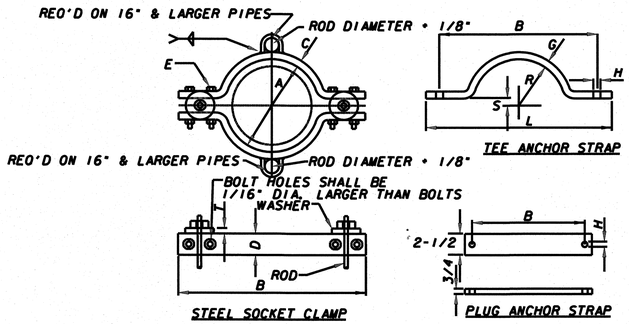

GENERAL NOTES:

1) INSTALLATION OF AND MATERIALS FOR RODS, CLAMPS, STRAPS, BOLTS AND WASHERS SHALL CONFORM TO THE NATIONAL FIRE CODES-NFPA NO. 24 LATEST REVISION.
2) YOKES AND ANCHOR STRAPS FOR FITTINGS LARGER THAN 12" SHALL BE DESIGNED AND APPROVED FOR THE SPECIFIC INSTALLATION.
3) RODS TO BE HIGH TENSILE, HOT ROLLED STEEL WITH TENSILE STRENGTH OF 150,000 PSI AND A MINIMUM YIELD STRENGTH OF 130,000 PSI.
4) NUTS TO BE HEAVY DUTY SEMI-FINISHED WITH NATIONAL COURSE THREADS.
5) AFTER INSTALLATION TIE RODS AND CLAMP ASSEMBLY SHALL BE THROUGHLY COVERED WITH ROYSTON LABORATORIES INC. ROSKOTE MASTIC NO. A939 OR KOPPERS CO. INC. BITUMASTIC SUPERSERVICE BLACK OR APPROVED EQUIVALENT.

STRAPPING DETAILS

N. T. S.

ANCHOR STRAP DETAILS

FITTING SIZE	B	G	H	L	R	S
	DIMENSIONS (INCHES)					
4	10 1/8	5/8X2 1/2	13/16	12 1/2	12 1/2	3/4
6	12 1/8	5/8X2 1/2	13/16	14 1/2	3 9/16	3/4
8	14 3/8	5/8X2 1/2	13/16	16 3/4	4 21/32	3/4
10	16 11/16	5/8X2 1/2	11/16	19 1/16	5 3/4	3/4
12	19 3/16	5/8 X 3	11/16	22 5/16	6 3/4	7/8

SEE GENERAL NOTE NO. 2

STEEL SOCKET CLAMP

PIPE SIZE	A	B	C	D	BOLT E	T	ROD & CI WASH. SIZE
	DIMENSIONS (INCHES)						
4	5	14 5/8	1/2	2	5/8X 3 1/2	5/8	3/4
6	7 1/8	16 7/8	1/2	2	5/8X 3 1/2	5/8	3/4
8	9 5/16	19 1/8	5/8	2 1/2	5/8X 3 3/4	5/8	3/4
10	11 1/2	21 3/8	5/8	2 1/2	3/4X 3 3/4	3/4	1
12	13 1/2	25 1/8	5/8	3	7/8X 4 1/2	3/4	1
14	15 3/4	28 1/4	3/4	3	7/8X 4 1/2	7/8	11/8
16	17 7/8	31 3/8	3/4	4	1X 4 1/2	7/8	11/8
18	20	35 1/8	3/4	4	11/4X 5	11/8	11/4
20	22 1/8	37 3/4	3/4	4 1/2	11/4X 5	11/8	13/8
24	26 3/8	44 1/4	3/4	5	11/2X 5 1/2	11/4	11/2

MINIMUM DIMENSIONS IN FEET FOR CONCRETE BLOCKING

BEND	SIZE	A	B	C	D	VOLUME CU. YD.
11-1/4	6"	1.0'	1.0'	7"	1.0'	0.03'
	8"	1.0'	1.25'	7"	1.0'	0.04'
	12"	1.0'	2.0'	11"	2.0'	0.1'
	16"	2.0'	3.0'	15"	2.0'	0.3'
	20"	2.0'	3.0'	19"	3.0'	0.5'
	24"	3.0'	4.0'	22"	3.0'	0.8'
22-1/2	6"	1.0'	1.5'	7"	1.0'	0.04'
	8"	1.0'	2.0'	7"	2.0'	0.1'
	12"	2.0'	3.0'	11"	2.0'	0.3'
	16"	2.0'	4.0'	15"	3.0'	0.6'
	20"	3.0'	5.0'	19"	3.0'	1.0'
	24"	4.0'	6.0'	22"	4.0'	2.3'
45	6"	1.5'	2.0'	7"	1.5'	0.11'
	8"	2.0'	3.0'	7"	2.0'	0.3'
	12"	2.0'	4.0'	11"	3.0'	0.7'
	16"	3.0'	5.0'	15"	4.0'	1.4'
	20"	4.0'	6.0'	19"	5.0'	2.8'
	24"	5.0'	8.0'	22"	6.0'	5.0'
90	6"	1.5'	2.5'	7"	2.0'	0.2'
	8"	2.0'	3.0'	7"	3.0'	0.4'
	12"	4.0'	6.0'	11"	4.0'	2.1'
	16"	4.0'	7.0'	15"	5.0'	3.1'
	20"	8.0'	8.0'	19"	7.0'	5.3'
	24"	6.0'	10.0'	22"	8.0'	10.5'
TEES AND PLUGS	6"	1.5'	2.0'	7"	1.75'	0.13'
	8"	2.0'	3.0'	7"	2.0'	0.3'
	12"	2.0'	4.0'	11"	4.0'	0.8'
	16"	3.0'	5.0'	15"	5.0'	1.8'
	20"	4.0'	7.0'	19"	6.0'	3.9'
	24"	5.0'	8.0'	22"	7.0'	5.5'

DESIGN DATA
DIMENSION OF THRUST BLOCK IN FEET BASED ON 2000 POUNDS PER SQUARE FOOT SOIL BEARING PRESSURE AND 250 POUNDS PER SQUARE INCH TEST PRESSURE. ACTUAL INSIDE DIAMETER OF DUCTILE IRON PIPE, CLASS 2, USED AS STANDARD. CONCRETE SHALL BE CLASS A, 3000 PSI HIGH EARLY.
NOTE:
SOIL CONDITIONS SHALL BE VERIFIED BEFORE THRUST BLOCK DESIGN IS IMPLEMENTED. CONCRETE FORMED SO IT DOES NOT INTERFERE WITH BOLTS/NUTS OR HOLES.

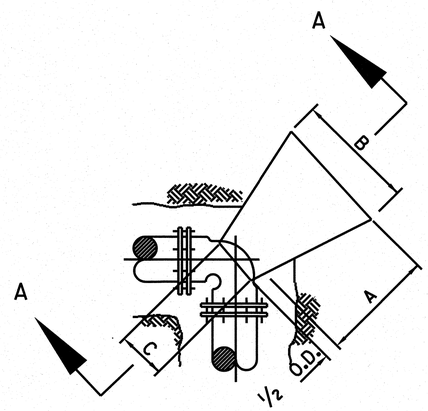

DETAIL - THRUST BLOCK

N.T.S.

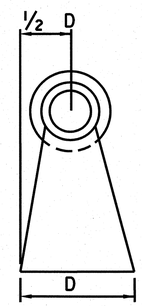

SECTION A-A

WATER MAIN DETAILS

PROPERTY AND EXISTING R/W LINE
REQUIRED R/W LINE
CONSTRUCTION LIMITS
EASEMENT FOR CONSTR & MAINTENANCE OF SLOPES
EASEMENT FOR CONSTR OF SLOPES
EASEMENT FOR CONSTR OF DRIVES

HOFSTADTER & ASSOCIATES, INC.
CIVIL/ENVIRONMENTAL/TRANSPORTATION
CONSULTING ENGINEERS
4571 ARKWRIGHT ROAD
MACON, GEORGIA 31210

DATE	REVISIONS	DATE	REVISIONS
6-8-2011	ADDED DRAWING NO. 44-005		

STATE OF GEORGIA
DEPARTMENT OF TRANSPORTATION

WATER RELOCATION PLAN

PROJECT NO: EDS00-0545-00 (014)
COUNTY: TOOMBS/EMANUEL
DATE: 5-11-11

DRAWING No. 44-005

...\details\waterdetails.dgn 1/24/2011 11:48:22 AM