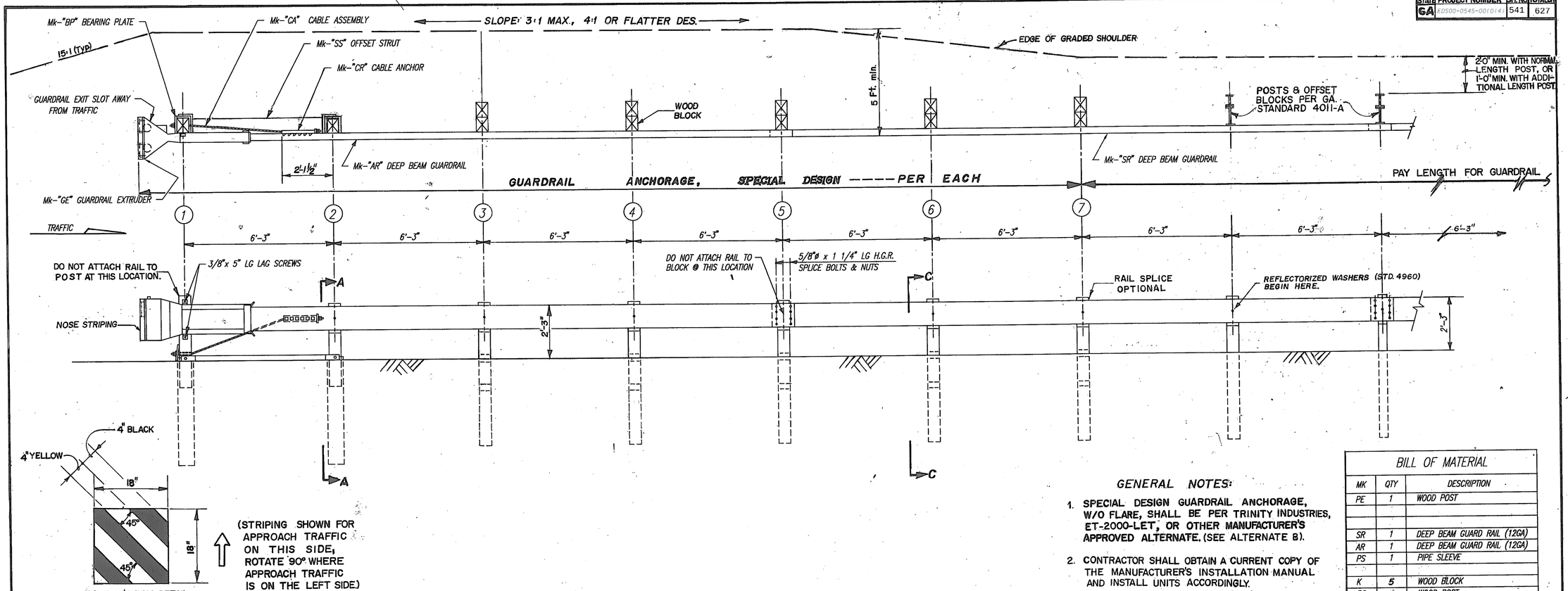

(STRIPING SHOWN FOR APPROACH TRAFFIC ON THIS SIDE, ROTATE 90° WHERE APPROACH TRAFFIC IS ON THE LEFT SIDE.)

NOSE STRIPING DETAIL

BLACK GLOSS ENAMEL INK SCREEN PRINTED ON PRESSURE SENSITIVE ENGINEER GRADE REFLECTIVE SHEETING, TP. I, LEVEL 'A' (SECTION 913).

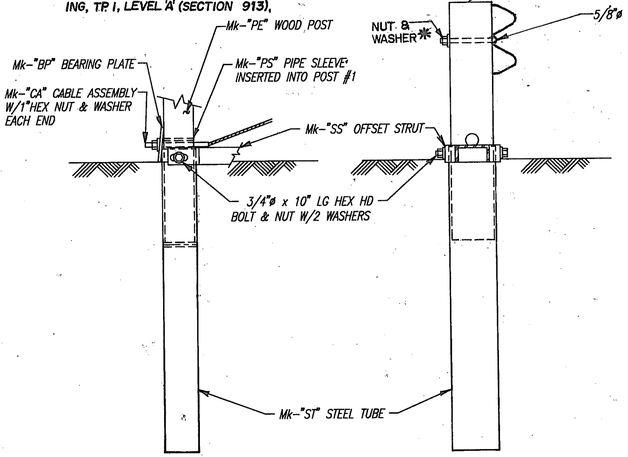

PARTIAL VIEW @ POST #1

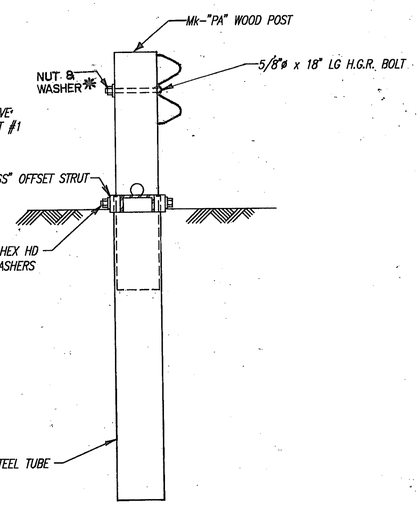

SECTION "A-A"
(@ POST #2)

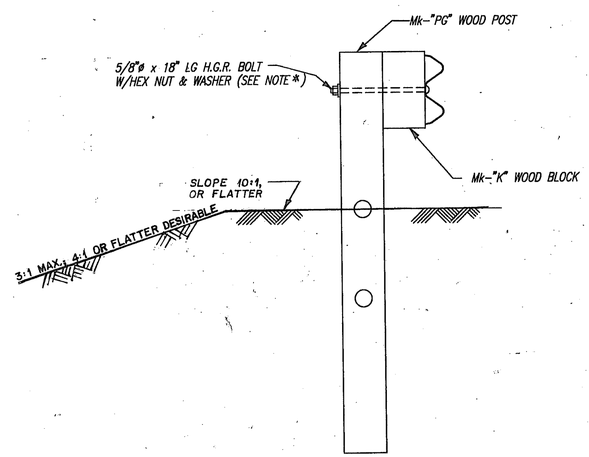

NOTE:
SECTION "C-C" IS SIMILAR @ POST #5 EXCEPT RAIL IS NOT ATTACHED.

SECTION "C-C"
(TYP @ POSTS #'s 3,4,5,6, & 7)

GENERAL NOTES:

1. SPECIAL DESIGN GUARDRAIL ANCHORAGE, W/O FLARE, SHALL BE PER TRINITY INDUSTRIES, ET-2000-LET, OR OTHER MANUFACTURER'S APPROVED ALTERNATE. (SEE ALTERNATE B).
2. CONTRACTOR SHALL OBTAIN A CURRENT COPY OF THE MANUFACTURER'S INSTALLATION MANUAL AND INSTALL UNITS ACCORDINGLY.
3. MODIFICATIONS TO DETAILS SHOWN ARE ACCEPTABLE UPON WRITTEN APPROVAL FROM THE FEDERAL HIGHWAY ADMINISTRATION.

*NOTE:
THE 5/8" FLAT WASHER IS USED UNDER THE NUT BEHIND THE POST ONLY. NO WASHER IS USED AT THE RAIL.

SPECIAL NOTE:

A 50:1 Tapered Installation may be used to prevent the extruder from protruding over curb face or from encroaching within the shy line offset distance. See separate details, where applicable.

BILL OF MATERIAL

MK	QTY	DESCRIPTION
PE	1	WOOD POST
SR	1	DEEP BEAM GUARD RAIL (12GA)
AR	1	DEEP BEAM GUARD RAIL (12GA)
PS	1	PIPE SLEEVE
K	5	WOOD BLOCK
PG	5	WOOD POST
PA	1	WOOD POST
ST	2	STEEL TUBE, 6'-6"
BP	1	BEARING PLATE
CR	1	CABLE ANCHOR
CA	1	CABLE ASSEMBLY
SS	1	OFFSET STRUT (LEFT OR RIGHT)
GE	1	GUARDRAIL EXTRUDER
		HARDWARE
	4	3/4"ø x 10" HEX HD BOLT
	4	3/4" HEX NUT
	4	3/4" WASHER
	7	5/8"ø x 18" H.G.R. POST BOLT
	16	5/8"ø x 1 1/4" H.G.R. SPLICE BOLT
	8	5/8"ø x 7" HEX HD BOLT
	16	5/8" H.G.R. NUT
	15	5/8" HEX NUT
	7	5/8" WASHER
	2	3/8"ø x 5" LAG SCREW
	4	3/8"øx2" HEX HD SELF TPNG SCREW
	2	1/4"ø x 1 3/4" HEX HD BOLT
	4	3/8" WASHER
	2	1" HEX NUT
	2	1" WASHER
	2	1/4" HEX NUT

GEN. REV: 5/7/97
GEN. REV: 7/17/96

CONSTRUCTION DETAILS
SPECIAL DESIGN
GUARDRAIL ANCHORAGE
WITHOUT FLARE
(ALTERNATE A)

FEB., 95