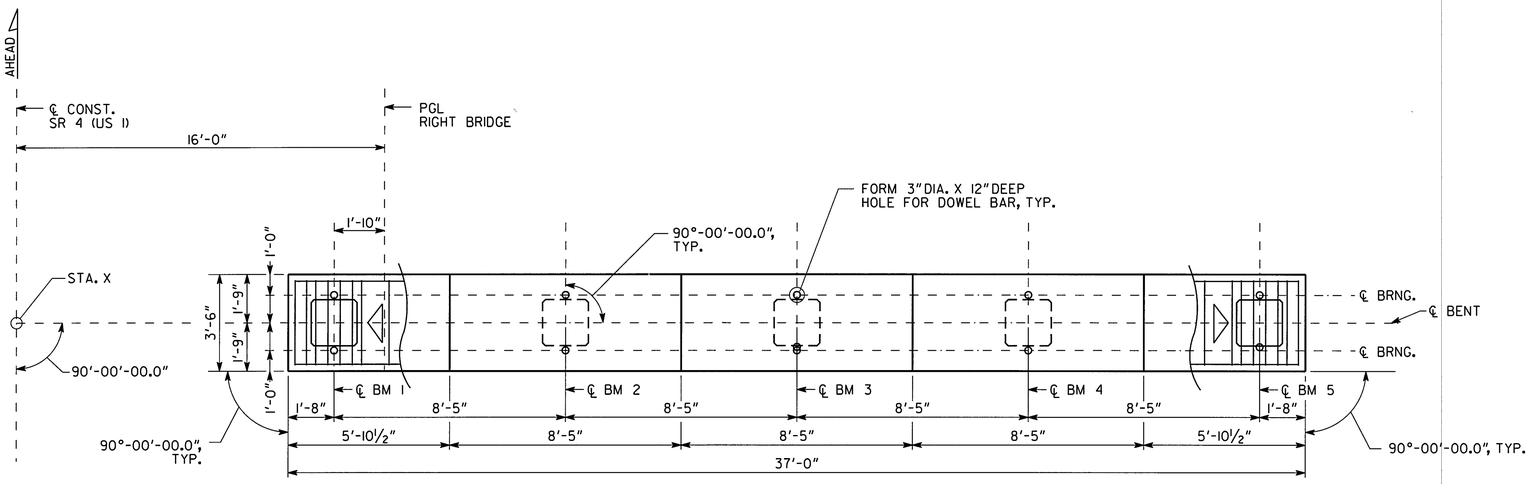

PLAN

BENT 2 SHOWN
(BENTS 3-12 SIMILAR)

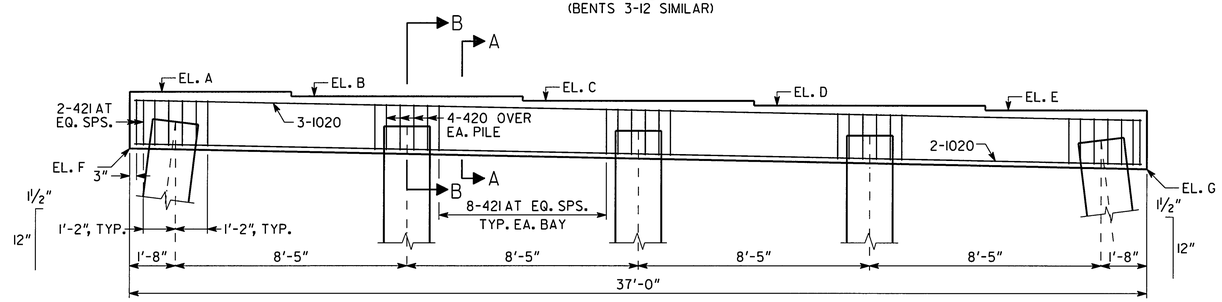

ELEVATION

BENT 2 SHOWN
(BENTS 3-12 SIMILAR)
(LOOKING AHEAD)

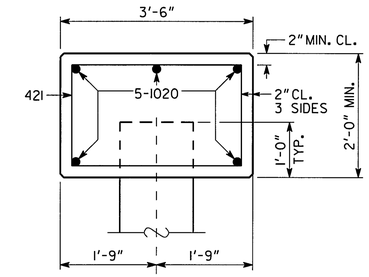

SECTION A-A

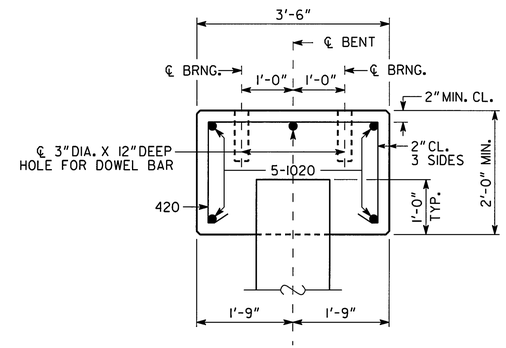

SECTION B-B

NOTES:

- MAINTAIN 2" CL. ON ALL REINFORCEMENT UNLESS OTHERWISE NOTED.
- ALL PILES SHALL BE PSC, 20 IN. SQ.

◁ DENOTES 1½" TO 12" BATTER.

PLAN DRIVING OBJECTIVE

ALL PILES SHALL BE DRIVEN TO A DRIVING RESISTANCE OF 110 TONS AFTER A MINIMUM TIP ELEVATION AS SHOWN BELOW IS ACHIEVED.

BENT	MIN. TIP ELEV.
2-6	115
7-9	105
10-12	115

TABLE OF ELEVATIONS

	A	B	C	D	E	F	G	STA. X
BENT 2	150.55	150.38	150.22	150.05	149.88	148.55	147.75	279+50.00
BENT 3	150.82	150.66	150.49	150.32	150.15	148.82	148.02	280+10.00
BENT 4	151.04	150.87	150.70	150.53	150.37	149.04	148.24	280+70.00
BENT 5	151.26	151.09	150.92	150.75	150.58	149.26	148.45	281+30.00
BENT 6	151.35	151.19	151.02	150.85	150.68	149.35	148.55	281+90.00
BENT 7	151.34	151.17	151.00	150.83	150.66	149.34	148.53	282+50.00
BENT 8	151.11	150.94	150.78	150.61	150.44	149.11	148.31	283+10.00
BENT 9	150.87	150.70	150.54	150.37	150.20	148.87	148.07	283+70.00
BENT 10	150.64	150.47	150.30	150.14	149.97	148.64	147.84	284+30.00
BENT 11	150.42	150.26	150.09	149.92	149.75	148.42	147.62	284+90.00
BENT 12	150.15	149.98	149.82	149.65	149.48	148.15	147.35	285+50.00

SUBSTRUCTURE QUANTITIES

ITEM	BENT 2	BENT 3	BENT 4	BENT 5	BENT 6	BENT 7	BENT 8	BENT 9	BENT 10	BENT 11	BENT 12
CY CLASS "A" CONCRETE	9.9	9.9	9.9	9.9	9.9	9.9	9.9	9.9	9.9	9.9	9.9
LB BAR REINFORCEMENT STEEL	1133	1133	1133	1133	1133	1133	1133	1133	1133	1133	1133

Moreland Altobelli Associates, Inc.
2211 Beaver Ruin Road Suite 190
Norcross, Georgia 30071
Tel.: (770) 263-5945

REVISIONS			
BY	DESCRIPTION	DATE	Δ
QSJ	REDRAWN AND RESUBMITTED	7/26/2011	1

DESIGNED	EJC
DRAWN	DAW
CHECKED	QSJ
GDOT LIAISON	WEI
REVIEWED	WEI/WMD
APPROVED	PVL
SCALE : 3/8" = 1'-0"	
FEBRUARY 2010	

BRIDGE NO. 1RT.

GEORGIA DEPARTMENT OF TRANSPORTATION
PRECONSTRUCTION DIVISION - OFFICE OF BRIDGE AND STRUCTURAL DESIGN

RIGHT BRIDGE - INTERMEDIATE BENTS 2-12
SR 4 (US 1) OVER PENDLETON CREEK
EDS00-0545-00(014)
TOOMBS/EMANUEL COUNTY

BRIDGE SHEET 11 OF 13

DRAWING No. 35-0011

X.DGN

USE ON CONSTRUCTION