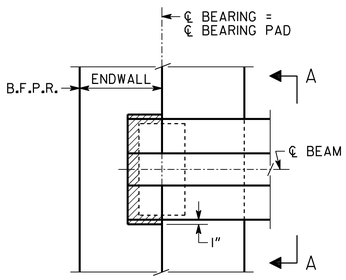

PLAN
BENT 1 SHOWN
BENT 13 SIMILAR

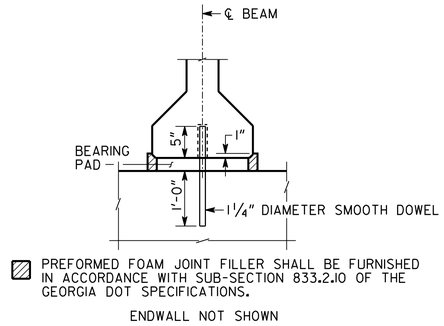

SECTION A-A

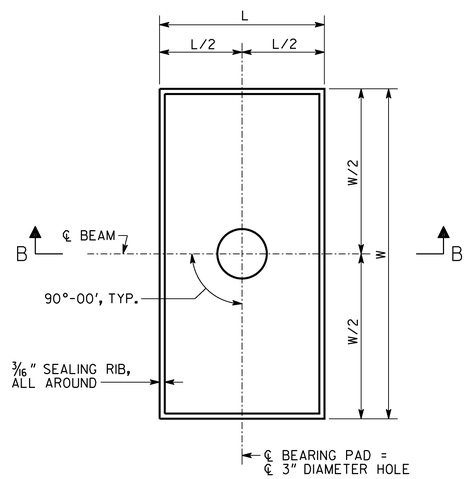

PLAN

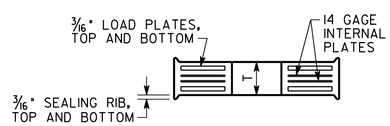

SECTION B-B

BEARING PAD

NOTES:

1) BEARING PADS HAVE BEEN DESIGNED ACCORDING TO AASHTO SPECIFICATIONS DIVISION I, SECTION 14.6.6 AND SHALL BE FURNISHED IN ACCORDANCE WITH AASHTO SPECIFICATIONS DIVISION II, SECTION 18.2, BEARINGS.
2) 1 1/4" DIAMETER SMOOTH DOWELS SHALL BE ASTM A 709 GRADE 36.
3) BEARING PADS SHALL BE MADE OF 60 DUROMETER HARDNESS NEOPRENE, GRADE 2 OR HIGHER.
4) 3" DIAMETER HOLE IN BEARING PADS MAY BE FORMED OR DRILLED.
5) BEARING PADS SHALL HAVE 1/4" COVER ON THE TOP, BOTTOM, AND SIDES AND AROUND THE HOLE.
6) 3/16" LOAD PLATES AND 14 GAGE INTERNAL PLATE(S) (IF REQUIRED) SHALL BE ASTM A 709 GRADE 36 OR ASTM A 1011 GRADE 36.
7) NUMBER OF INTERNAL PLATES SHOWN FOR ILLUSTRATION PURPOSES ONLY. THE NUMBER OF INTERNAL PLATE(S) SPECIFIED SHALL BE EQUALLY SPACED BETWEEN LOAD PLATES.
8) USE OF 1 1/2° MOLD DRAFT IS OPTIONAL.

VOID

SPAN	BENT	BEAM MARK (LT & RT)	BEARING PADS							
			W (IN.)	L (IN.)	T (IN.)	NUMBER OF INTERNAL PLATE(S)	DESIGN SHEAR DEFLECTION (IN.)	DESIGN LOADS (KIPS)		
								DEAD LOAD	LIVE LOAD (NO IMPACT)	DEAD LOAD + LIVE LOAD
1 & 12	1 & 13	EXT. BM.	16	10	2 5/8	3	0.84	60	47	107
		INT. BM.	16	10	2 5/8	3	0.82	58	51	109
	2 BK & 12 AH	EXT. BM.	16	10	2 5/8	3	0.44	60	47	107
		INT. BM.	16	10	2 5/8	3	0.42	58	51	109
2 & 11	2 AH & 12 BK	EXT. BM.	16	10	2 1/4	2	0.44	52	47	99
		INT. BM.	16	10	2 1/4	2	0.42	54	51	105
	3 BK & 11 AH	EXT. BM.	16	10	2 1/4	2	0.00	52	47	99
		INT. BM.	16	10	2 1/4	2	0.00	54	51	105
3 & 10	3 AH & 11 BK	EXT. BM.	16	10	2 1/4	2	0.00	52	47	99
		INT. BM.	16	10	2 1/4	2	0.00	54	51	105
	4 BK & 10 AH	EXT. BM.	16	10	2 1/4	2	0.44	52	47	99
		INT. BM.	16	10	2 1/4	2	0.42	54	51	105
4 & 9	4 AH & 10 BK	EXT. BM.	16	10	2 5/8	3	0.44	52	47	99
		INT. BM.	16	10	2 5/8	3	0.42	54	51	105
	5 BK & 9 AH	EXT. BM.	16	10	2 5/8	3	0.88	52	47	99
		INT. BM.	16	10	2 5/8	3	0.84	54	51	105
5 & 8	5 AH & 9 BK	EXT. BM.	16	10	2 5/8	3	0.88	52	47	99
		INT. BM.	16	10	2 5/8	3	0.84	54	51	105
	6 BK & 8 AH	EXT. BM.	16	10	2 5/8	3	0.44	52	47	99
		INT. BM.	16	10	2 5/8	3	0.42	54	51	105
6 & 7	6 AH & 8 BK	EXT. BM.	16	10	2 1/4	2	0.44	52	47	99
		INT. BM.	16	10	2 1/4	2	0.42	54	51	105
	7 BK & 7 AH	EXT. BM.	16	10	2 1/4	2	0.00	52	47	99
		INT. BM.	16	10	2 1/4	2	0.00	54	51	105

BRIDGE NO. 1 LT. AND RT.

Moreland Altobelli Associates, Inc.
2211 Beaver Ruin Road Suite 190
Norcross, Georgia 30071
Tel.: (770) 263-5945

REVISIONS			
BY	DESCRIPTION	DATE	Δ

DESIGNED	EJC
DRAWN	DAW
CHECKED	QSJ
GDOT LIAISON	
REVIEWED	WEI
APPROVED	PVL
SCALE : NONE	
AUGUST 2009	

GEORGIA DEPARTMENT OF TRANSPORTATION
PRECONSTRUCTION DIVISION - OFFICE OF BRIDGE AND STRUCTURAL DESIGN

BEARING DETAILS
SR 4 (US 1) OVER PENDLETON CREEK
EDS00-0545-00(014)
TOOMBS/EMANUEL COUNTY

BRIDGE SHEET 7 OF 13

DRAWING No. 35-0007

...\00602bc107prg.dgn 5/10/2011 11:47:49 PM