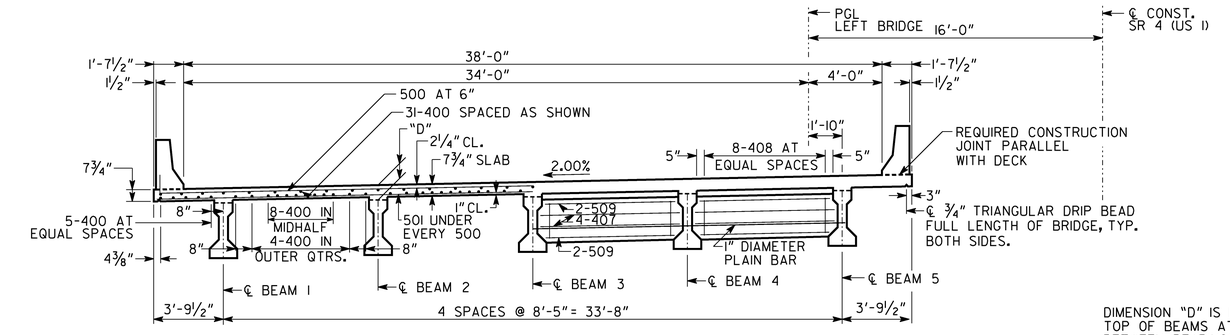

HALF SECTION THRU SLAB

HALF SECTION AT DIAPHRAGM

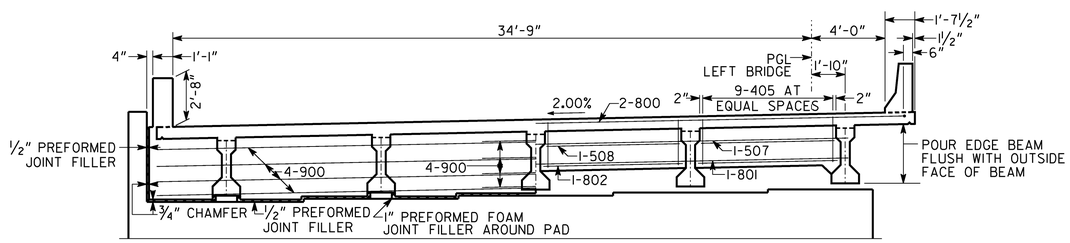

HALF SECTION AT ENDWALL

HALF SECTION AT EDGE BEAM

DIMENSION "D" IS MEASURED FROM TOP OF SLAB TO TOP OF BEAMS AT CENTERLINE BEARING. VARY "D" BETWEEN BEARINGS TO COMPENSATE FOR DEAD LOAD DEFLECTION AND VERTICAL CURVE. MAINTAIN A CONSTANT SLAB THICKNESS OF 7¾".

SPAN	"D" DIMENSION (IN.)
1, 4 & 12	9½
2, 3 & 8-11	9⅝
5-7	9⅜

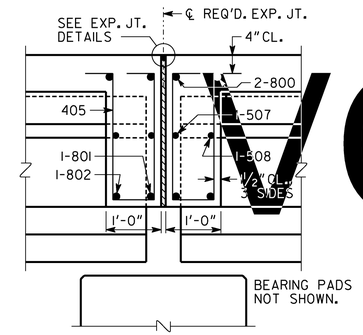

SLAB REINFORCEMENT NOT SHOWN.

SECTION THRU EDGE BEAM

BENTS 5 & 9

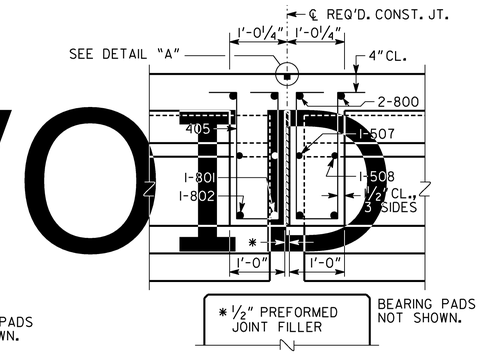

SLAB REINFORCEMENT NOT SHOWN.

SECTION THRU EDGE BEAM

BENTS 2-4, 6-8, & 10-12

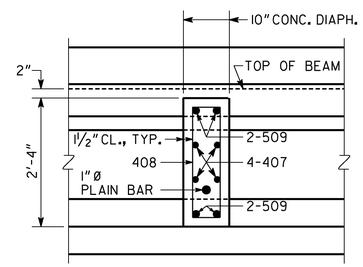

SLAB REINFORCEMENT NOT SHOWN.

SECTION THRU DIAPHRAGM

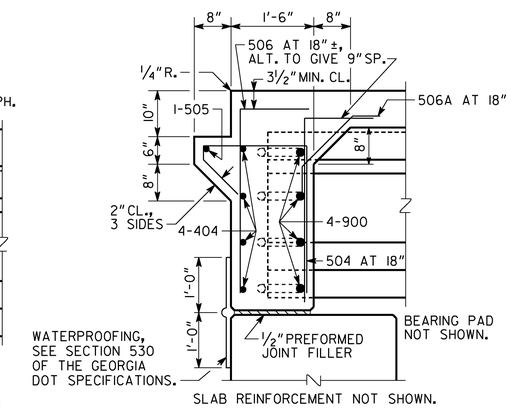

SLAB REINFORCEMENT NOT SHOWN.

SECTION AT ENDWALL

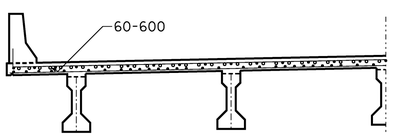

HALF SECTION THRU SLAB AT INTERMEDIATE BENT

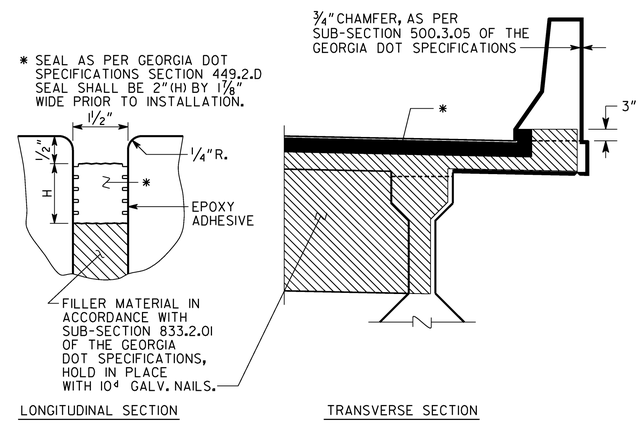

LONGITUDINAL SECTION

TRANSVERSE SECTION

EXPANSION JOINT DETAILS AT BENTS 5 & 9

DETAIL "A"

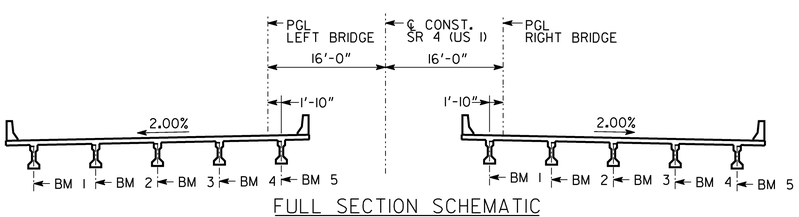

FULL SECTION SCHEMATIC

NOTES:

- SECTIONS ARE CUT LOOKING AHEAD AND ARE SHOWN FOR LEFT BRIDGE. RIGHT BRIDGE SYMMETRICAL.
- LAP 900 BAR 5'-10" MINIMUM.

BRIDGE NO. 1 LT. AND RT.

Moreland Altobelli Associates, Inc.
2211 Beaver Ruin Road Suite 190
Norcross, Georgia 30071
Tel.: (770) 263-5945

REVISIONS			
BY	DESCRIPTION	DATE	Δ

DESIGNED	EJC
DRAWN	DAW
CHECKED	QSJ
GDOT LIAISON	
REVIEWED	WEI
APPROVED	PVL
SCALE : ¼" = 1'-0"	
AUGUST 2009	

GEORGIA DEPARTMENT OF TRANSPORTATION

PRECONSTRUCTION DIVISION - OFFICE OF BRIDGE AND STRUCTURAL DESIGN

DECK SECTIONS

SR 4 (US 1) OVER PENDLETON CREEK

EDS-545(14)

TOOMBS/EMANUEL COUNTY

BRIDGE SHEET 4 OF 13

DRAWING No. 35-0004