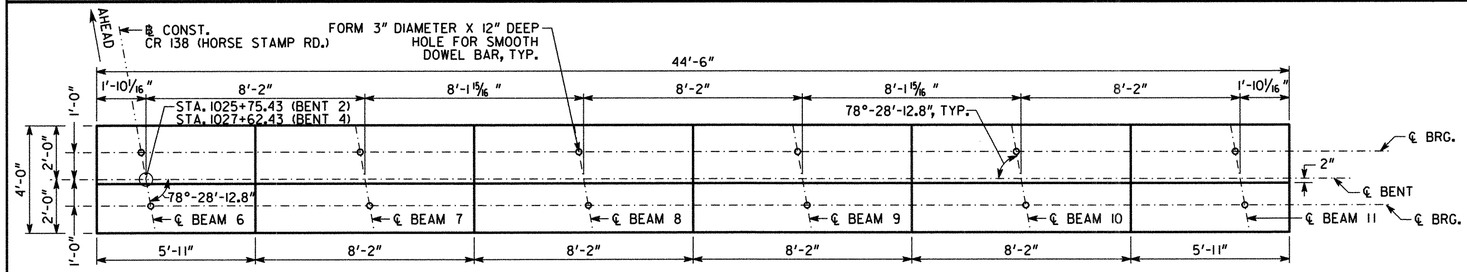

PLAN

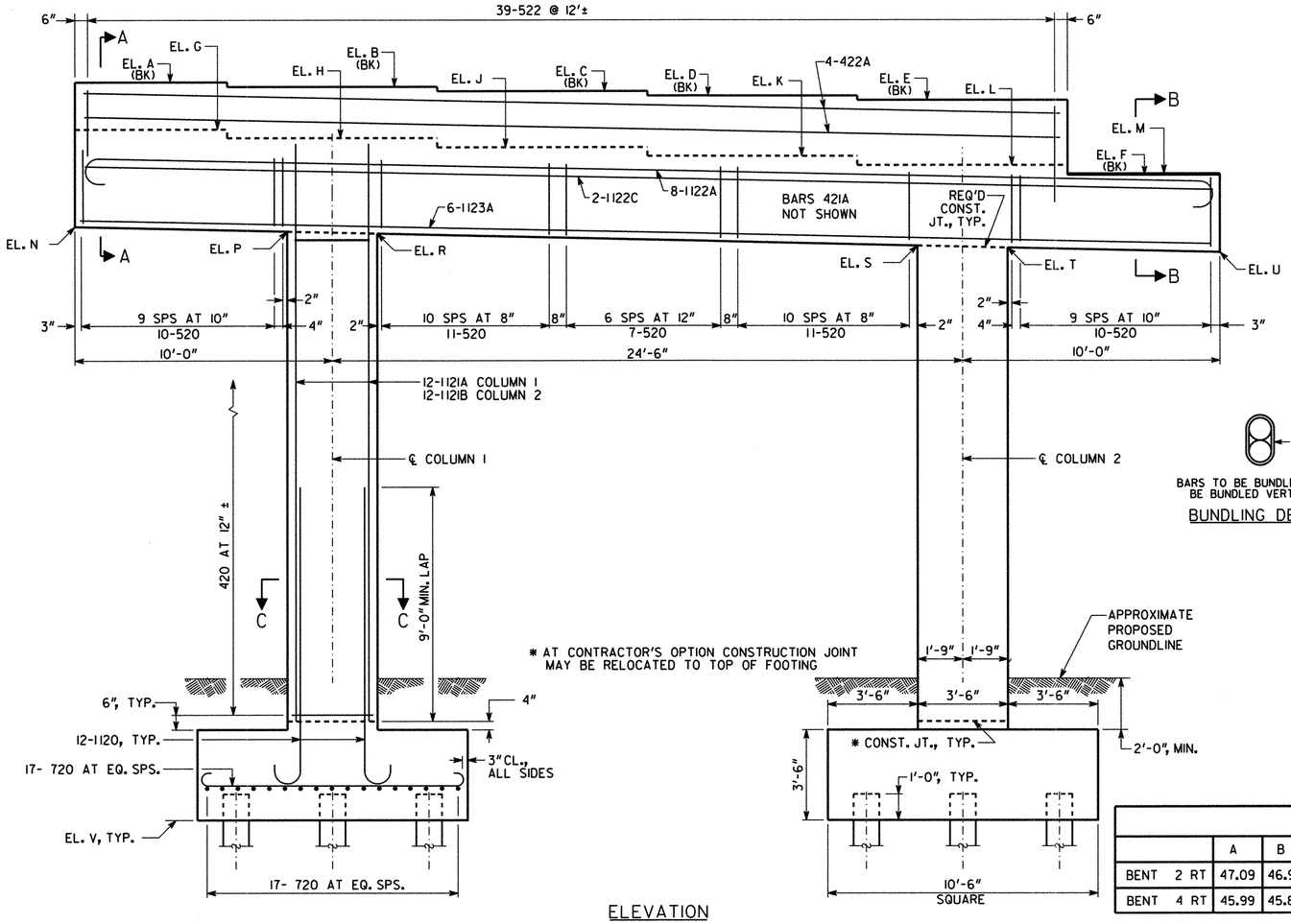

ELEVATION
(LOOKING AHEAD)
BENT 2 RT SHOWN
(BENT 4 RT SIMILAR)

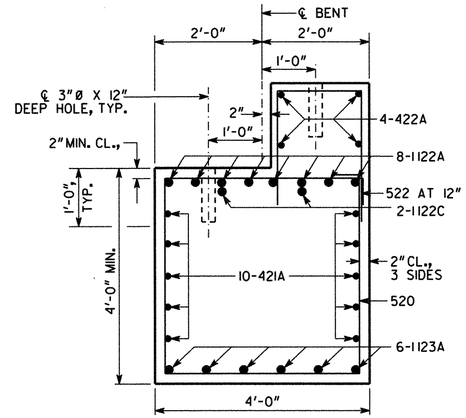

SECTION A-A
BENT 2 SHOWN
(BENT 4 REVERSED)

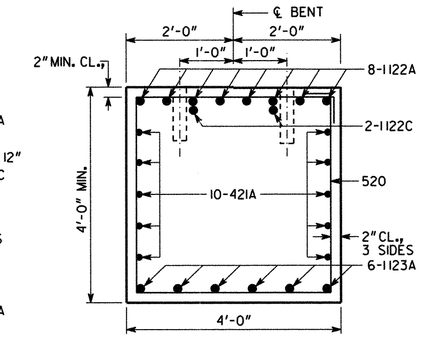

SECTION B-B
BENT 2 SHOWN

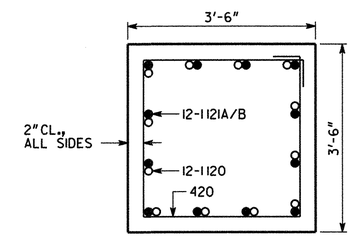

SECTION C-C

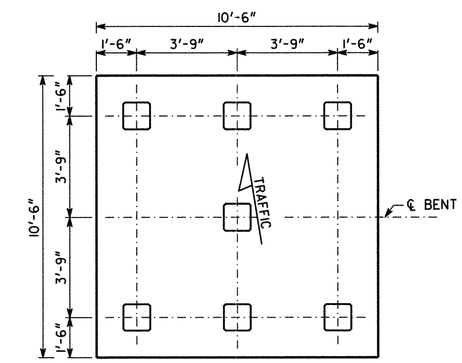

PILE LAYOUT

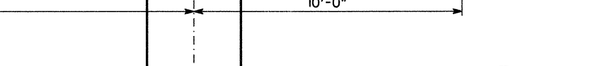

BARS TO BE BUNDLED SHALL BE BUNDLED VERTICALLY

BUNDLING DETAIL

PLAN DRIVING OBJECTIVE

ALL PILES SHALL BE DRIVEN TO A DRIVING RESISTANCE OF 95 TONS AFTER MINIMUM TIP ELEVATIONS OF -15 AT BENT 2 RT & -14 AT BENT 4 RT. ARE ACHIEVED.

NOTES:

- MAINTAIN 2" CL. ON ALL REINFORCEMENT UNLESS OTHERWISE NOTED.
- ALL PILES SHALL BE PSC, 18 IN. SQ.

TABLE OF ELEVATIONS

	A	B	C	D	E	F	G	H	J	K	L	M	N	P	R	S	T	U	V
BENT 2 RT	47.09	46.95	46.78	46.60	46.43	44.63	45.51	45.37	45.19	45.02	44.84	44.67	41.51	41.32	41.24	40.76	40.68	40.49	18.50
BENT 4 RT	45.99	45.86	45.71	45.55	45.40	45.24	47.59	47.46	47.31	47.14	46.98	45.18	41.99	41.82	41.74	41.30	41.22	41.05	18.50

SUBSTRUCTURE QUANTITIES

ITEM	BENT 2 RT	BENT 4 RT
CY CLASS "AA" CONCRETE	77.1	77.6
LB BAR REINF STEEL	12015	12082

Moreland Altobelli Associates, Inc.
2211 Beaver Ruin Road Suite 190
Norcross, Georgia 30071
Tel.: (770) 263-5945

REVISIONS			
BY	DESCRIPTION	DATE	Δ

DESIGNED	JTW
DRAWN	DAW
CHECKED	QSJ
GDOT LIAISON	PSR
REVIEWED	WEI/WMD
APPROVED	PVL
SCALE : 3/8" = 1'-0"	
JANUARY 2010	

BRIDGE NO. 1

GEORGIA DEPARTMENT OF TRANSPORTATION
PRECONSTRUCTION DIVISION - OFFICE OF BRIDGE AND STRUCTURAL DESIGN

INTERMEDIATE BENTS 2 RT AND 4 RT
CR 138 (HORSESTAMP CHURCH ROAD) OVER I-95
NH000-0095-01(167)
CAMDEN COUNTY

BRIDGE SHEET 12 OF 18

DRAWING No. 35-0012

X.DGN