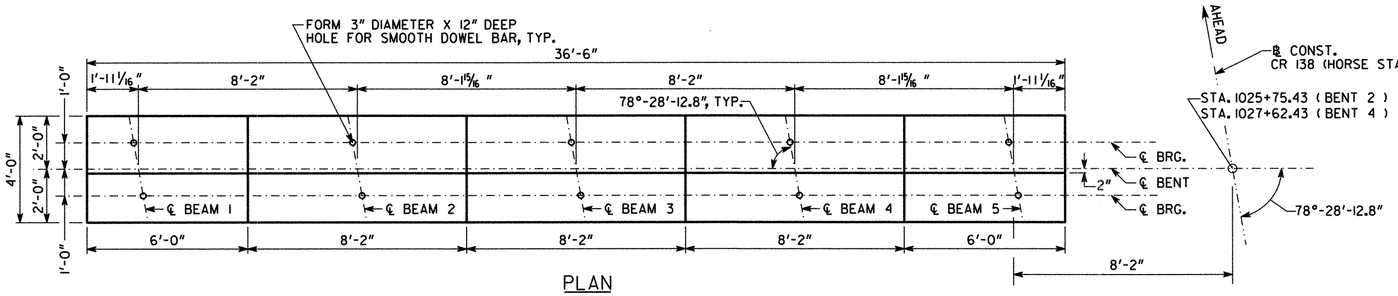

PLAN

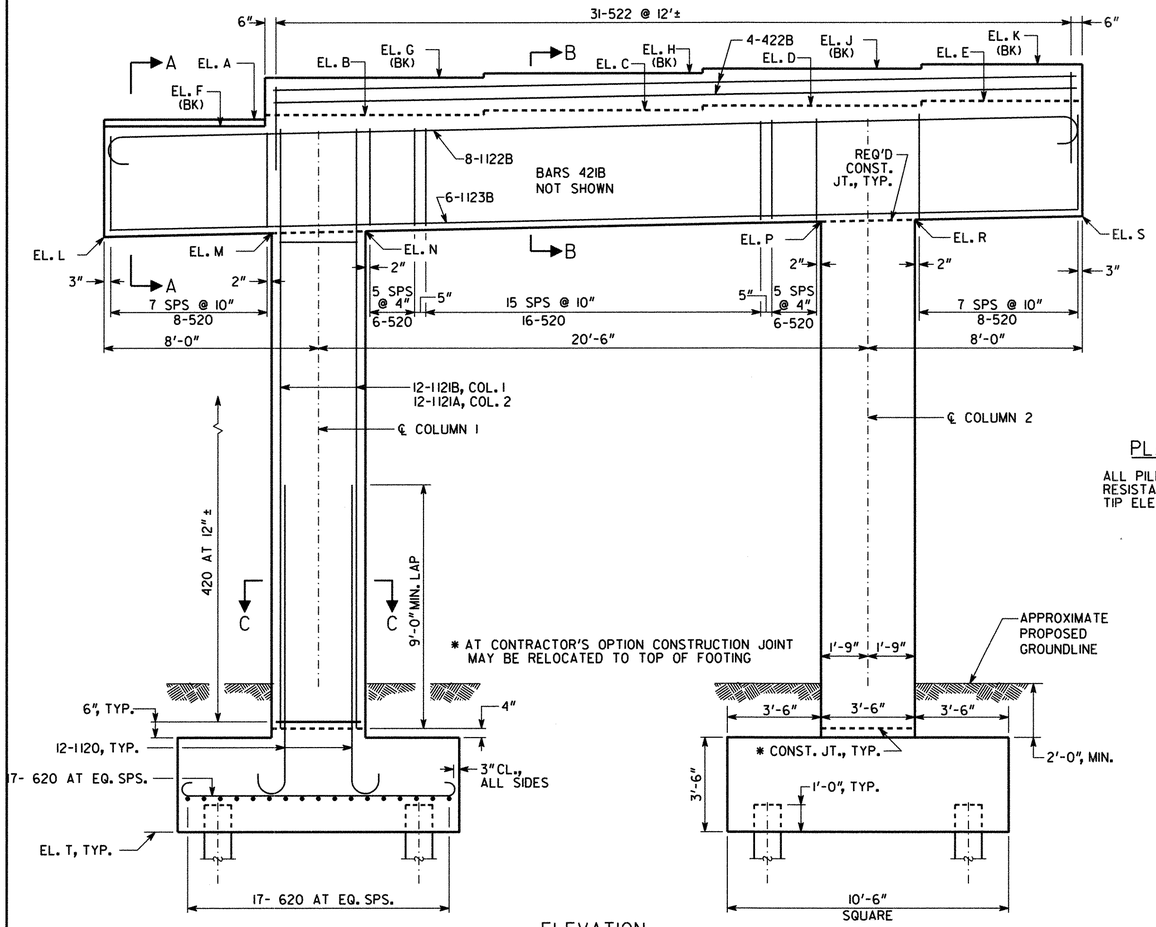

ELEVATION
(LOOKING AHEAD)

BENT 2 LT SHOWN
BENT 4 LT SIMILAR

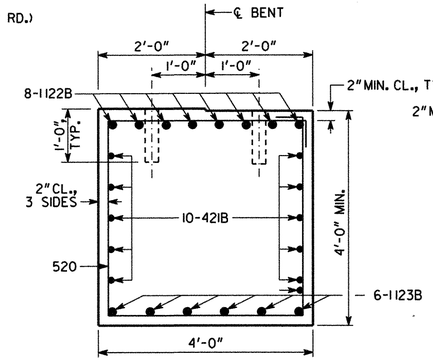

SECTION A-A
BENT 2 SHOWN

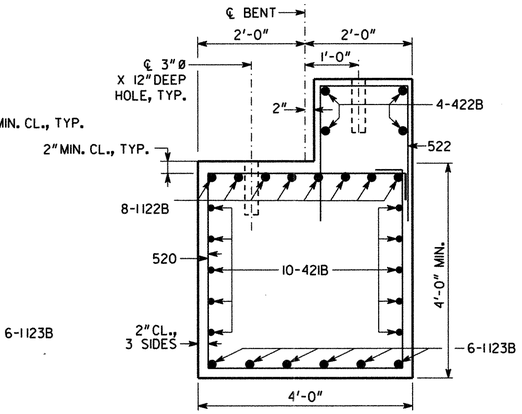

SECTION B-B
BENT 2 SHOWN
BENT 4 REVERSED

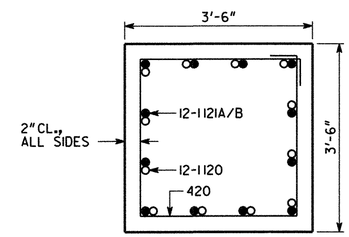

SECTION C-C

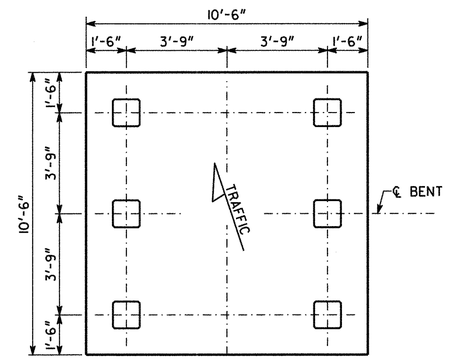

PILE LAYOUT

PLAN DRIVING OBJECTIVE

ALL PILES SHALL BE DRIVEN TO A DRIVING RESISTANCE OF 95 TONS AFTER A MINIMUM TIP ELEVATION OF -14 IS ACHIEVED.

SUBSTRUCTURE QUANTITIES		
ITEM	BENT 2 LT	BENT 4 LT
CY CLASS "AA" CONCRETE	71.2	71.7
LB BAR REINF STEEL	10236	10295

NOTES:

- MAINTAIN 2" CL. ON ALL REINFORCEMENT UNLESS OTHERWISE NOTED.
- ALL PILES SHALL BE PSC, 18 IN SQ

TABLE OF ELEVATIONS																	
	A	B	C	D	E	F	G	H	J	K	L	M	N	P	R	S	T
BENT 2 LT	44.80	44.95	45.10	45.25	45.39	44.77	46.54	46.69	46.83	46.98	40.64	40.77	40.84	41.19	41.26	41.39	18.50
BENT 4 LT	45.17	46.96	47.12	47.29	47.45	45.19	45.36	45.52	45.69	45.85	41.05	41.18	41.26	41.61	41.69	41.82	18.50

BRIDGE NO. 1

Moreland Altobelli Associates, Inc.
2211 Beaver Ruin Road Suite 190
Norcross, Georgia 30071
Tel.: (770) 263-5945

REVISIONS			
BY	DESCRIPTION	DATE	Δ

DESIGNED	JTW
DRAWN	DAW
CHECKED	QSJ
GDOT LIAISON	PSR
REVIEWED	WEI/WMD
APPROVED	PVL
SCALE : 3/8" = 1'-0"	
JANUARY 2010	

GEORGIA DEPARTMENT OF TRANSPORTATION
PRECONSTRUCTION DIVISION - OFFICE OF BRIDGE AND STRUCTURAL DESIGN

INTERMEDIATE BENTS 2 LT & 4 LT
CR 138 (HORSESTAMP CHURCH ROAD) OVER I-95
NH000-0095-01(167)
CAMDEN COUNTY

BRIDGE SHEET 11 OF 18

DRAWING No. 35-0011

X.DGN