DIMENSION "D" IS MEASURED FROM TOP OF SLAB TO TOP OF BEAMS AT CENTERLINE BEARING. VARY "D" BETWEEN BEARINGS TO COMPENSATE FOR DEAD LOAD DEFLECTION AND VERTICAL CURVE. MAINTAIN A CONSTANT SLAB THICKNESS OF 7⅜" BETWEEN BEAM FLANGES

"D" = 10¼"

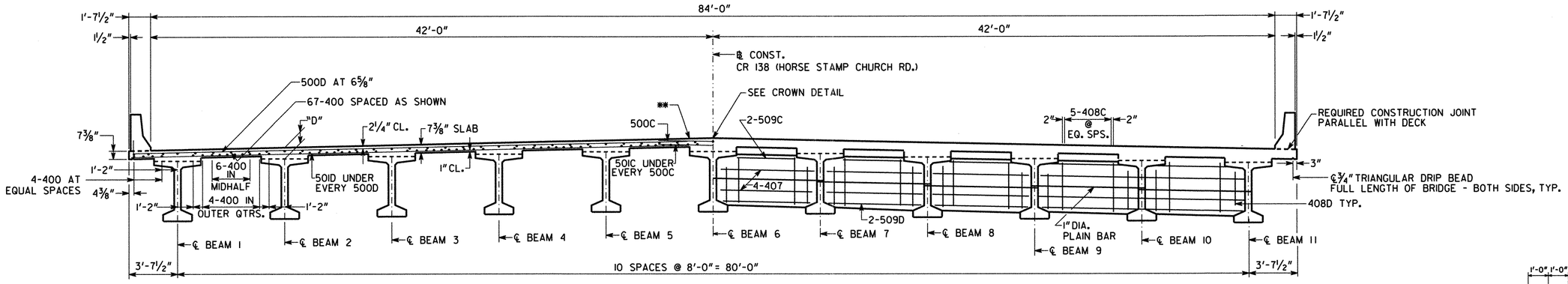

HALF SECTION THRU SLAB

HALF SECTION AT DIAPHRAGM

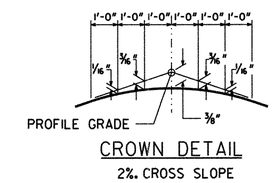

CROWN DETAIL

2% CROSS SLOPE

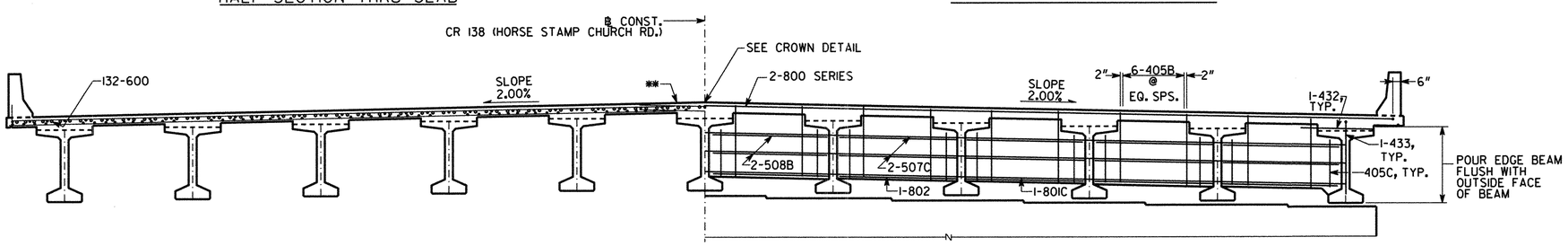

HALF SECTION THRU SLAB AT INTERMEDIATE BENT

HALF SECTION AT EDGE BEAM

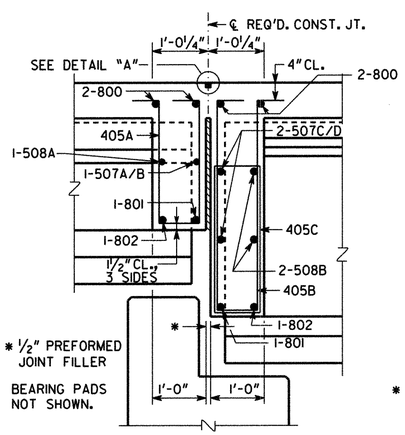

SLAB REINFORCEMENT NOT SHOWN.

SECTION THRU EDGE BEAM

BENTS 2 & 4

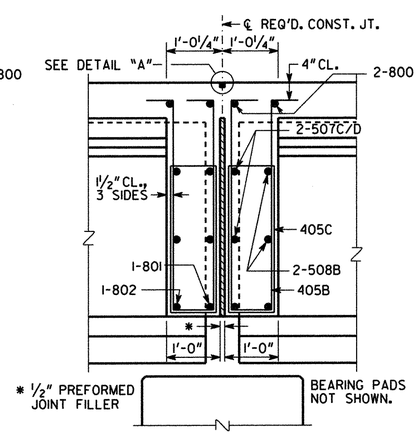

SLAB REINFORCEMENT NOT SHOWN.

SECTION THRU EDGE BEAM

BENT 3

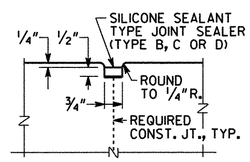

DETAIL "A"

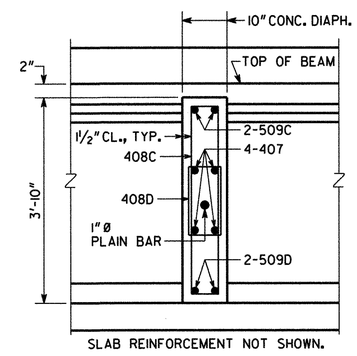

SLAB REINFORCEMENT NOT SHOWN.

SECTION THRU DIAPHRAGM

SPANS 2 & 3

** LAP BARS AT THIS LOCATION. SEE TABLE BELOW FOR LAP LENGTH

BAR SERIES	LAP LENGTH
500, 501, 507	2'-2"
800, 801	4'-7"

NOTE:

MAINTAIN 2" CLEARANCE ON ALL REINFORCEMENT UNLESS NOTED OTHERWISE.

Moreland Altobelli Associates, Inc.
2211 Beaver Ruin Road Suite 190
Norcross, Georgia 30071
Tel.: (770) 263-5945

REVISIONS			
BY	DESCRIPTION	DATE	Δ

DESIGNED	EJC
DRAWN	DAW
CHECKED	QSJ
GDOT LIAISON	PSR
REVIEWED	WEI/WMD
APPROVED	PVL
SCALE : ¼" = 1'-0"	
JANUARY 2010	

BRIDGE NO. 1

GEORGIA DEPARTMENT OF TRANSPORTATION

PRECONSTRUCTION DIVISION - OFFICE OF BRIDGE AND STRUCTURAL DESIGN

DECK SECTIONS (SPANS 2 & 3)

CR 138 (HORSESTAMP CHURCH ROAD) OVER I-95

NH000-0095-01(167)

CAMDEN COUNTY

BRIDGE SHEET 5 OF 18

DRAWING No. 35-0005

X.DGN