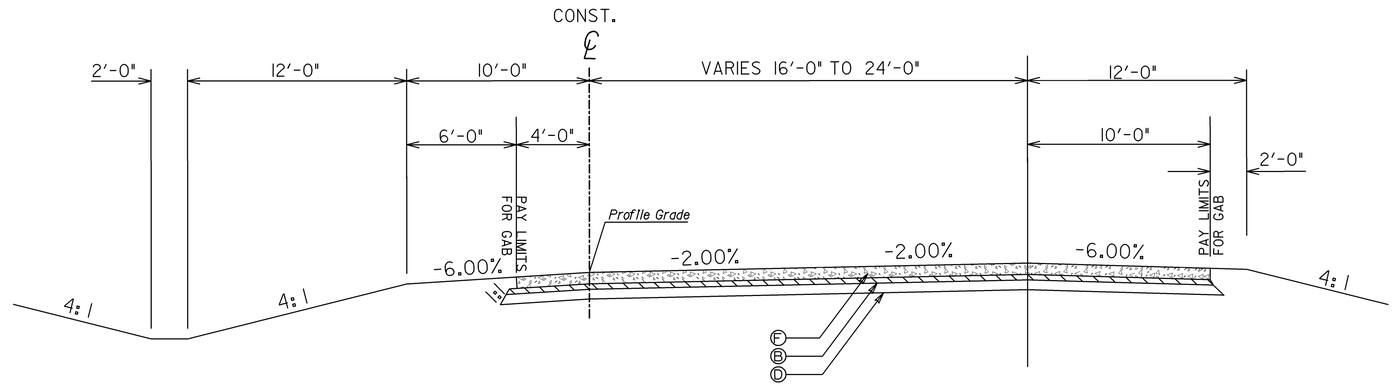

TS–07

TANGENT SECTION FOR RAMPS B

APPLIES TO RAMP B STA. 196+10.14 TO STA. 219+69.00

△ SLOPE 6.0% OR RATE OF S.E. WHICHEVER IS GREATER

☐ ALGEBRAIC DIFFERENCE IN PAVING AND SHOULDER SLOPE NOT TO EXCEED 8.0%

SLOPE CONTROLS		
SLOPE	CUT	FILL
4:1	0-6'	0-10'
3:1	6'-10'	--
2:1*	OVER 10'	OVER 10'

*GUARDRAIL REQUIRED

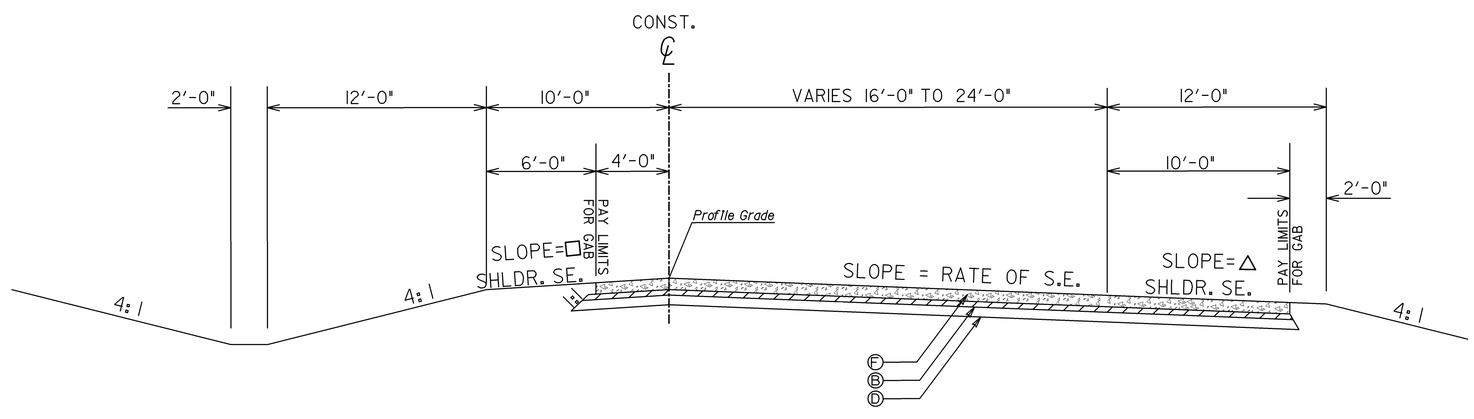

TS–08

SUPERELEVATED SECTION FOR RAMPS B

(SEE ROADWAY PLANS FOR SUPERELEVATION STATIONS & RATES)

REQUIRED PAVEMENT

Ⓐ ASPHALTIC CONCRETE, 12.5 mm SUPERPAVE, 165 lbs/sq. yd.
Ⓑ ASPHALTIC CONCRETE, 19 mm SUPERPAVE, 330 lbs/sq. yd.
Ⓒ ASPHALTIC CONCRETE, 25 mm SUPERPAVE, 330 lbs/sq. yd.
Ⓓ GRADED AGGREGATE BASE, 12"
Ⓔ ASPHALTIC CONCRETE LEVELING, AS REQUIRED
Ⓕ PLAIN PORTLAND CEMENT PAVEMENT, CLASS 3 CONCRETE , 10"

USE ON CONSTRUCTION

Moreland Altobelli Associates, Inc.
2211 Beaver Ruin Road
Suite 190
Norcross, Georgia 30071
Telephone (770) 263-5945

NOT TO SCALE

REVISION DATES		
8/09/10		

STATE OF GEORGIA
DEPARTMENT OF TRANSPORTATION
OFFICE: OFFICE OF PROGRAM DELIVERY

TYPICAL SECTIONS

I-95 / HORSE STAMP CHURCH ROAD INTERCHANGE

DRAWING No. 5-04