STATE	PROJECT NUMBER	SHEET NO.	TOTAL SHEETS
GA.	BRZLB-0239-00(003)	50	109

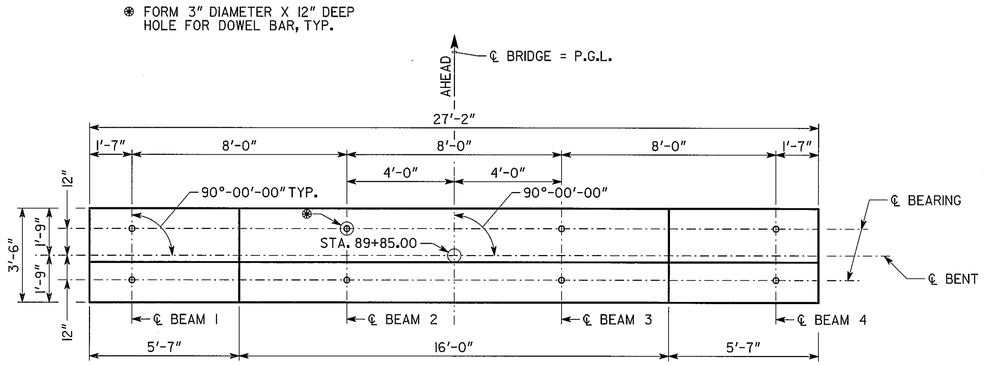

PLAN

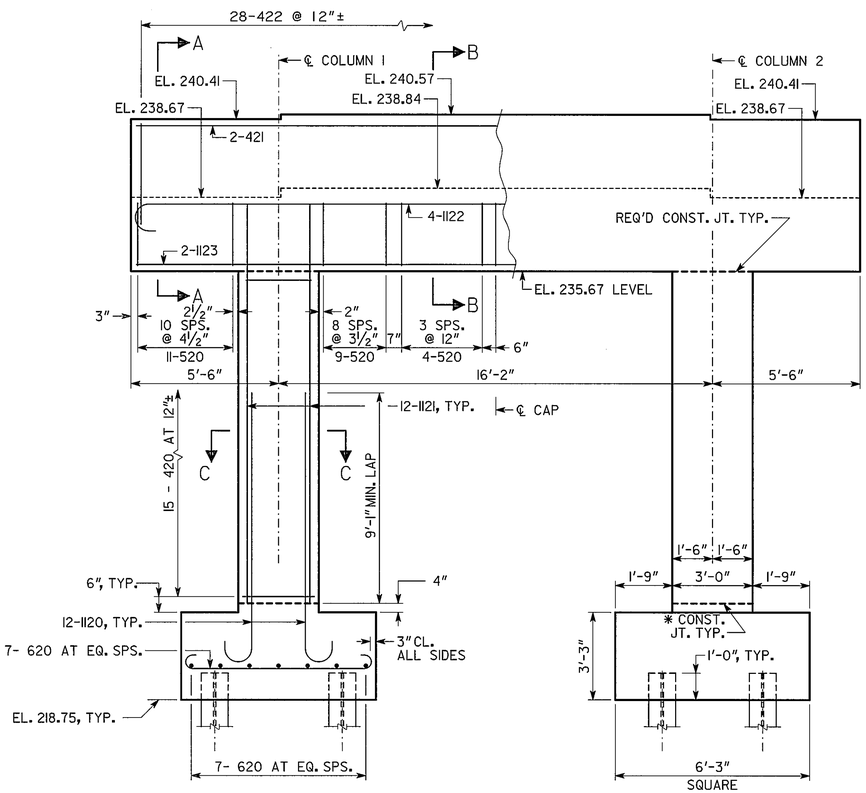

ELEVATION
(LOOKING AHEAD)

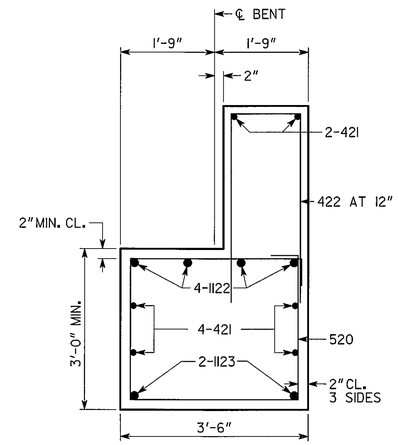

SECTION A-A
NO SCALE

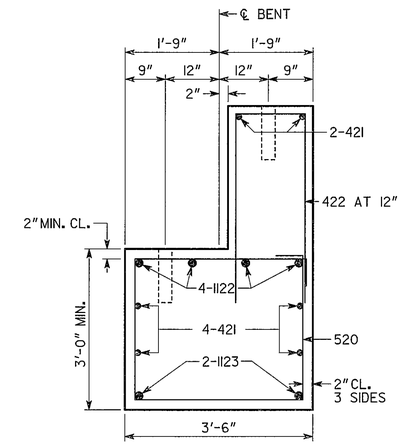

SECTION B-B
NO SCALE

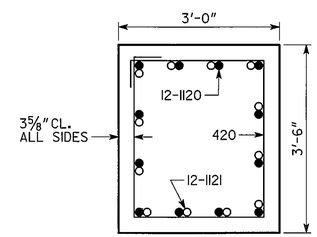

SECTION C-C
NO SCALE

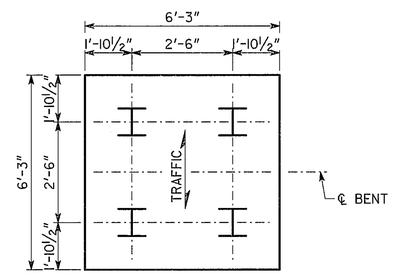

PILE LAYOUT
NO SCALE

NOTES: 1. MAINTAIN 2" CL. ON ALL REINFORCEMENT UNLESS OTHERWISE NOTED.

2. BENT CAP IS SYMMETRICAL ABOUT ℄ CAP.

3. * AT CONTRACTORS OPTION CONSTRUCTION JOINT MAY BE RELOCATED TO TOP OF FOOTING.

SUBSTRUCTURE QUANTITIES	
ITEM	BENT 2
CY CLASS "AA" CONCRETE	33.7
LB BAR REINF STEEL	7706

ALL PILES SHALL BE STEEL H, HP 14 X 73

PLAN DRIVING OBJECTIVE

ALL PILES SHALL BE DRIVEN TO A DRIVING RESISTANCE OF 77 TONS AFTER A MINIMUM TIP ELEVATION OF 190 IS ACHIEVED.

BRIDGE NO. 2

GEORGIA
DEPARTMENT OF TRANSPORTATION
PRECONSTRUCTION DIVISION-OFFICE OF BRIDGE DESIGN

INTERMEDIATE BENT 2
C. R. 84 (UNION CHURCH ROAD)
OVER PATAULA CREEK OVERFLOW
QUITMAN CO. BRZLB-0239-00(003)

SCALE: 3/8" = 1'-0" UNLESS NOTED DECEMBER 2009

DRAWING NO. 35-11
BRIDGE SHEET 11 OF 14

REVISIONS | DATE | BY

DESIGNED JLM | CHECKED RAG | REVIEWED WEI/WMD
DRAWN EMM | DESIGN GROUP RAG | APPROVED PVL

35-26 BENT2BR2.DGN