STATE	PROJECT NUMBER	SHEET NO.	TOTAL SHEETS
GA.	BRZLB-0239-00(003)	42	109

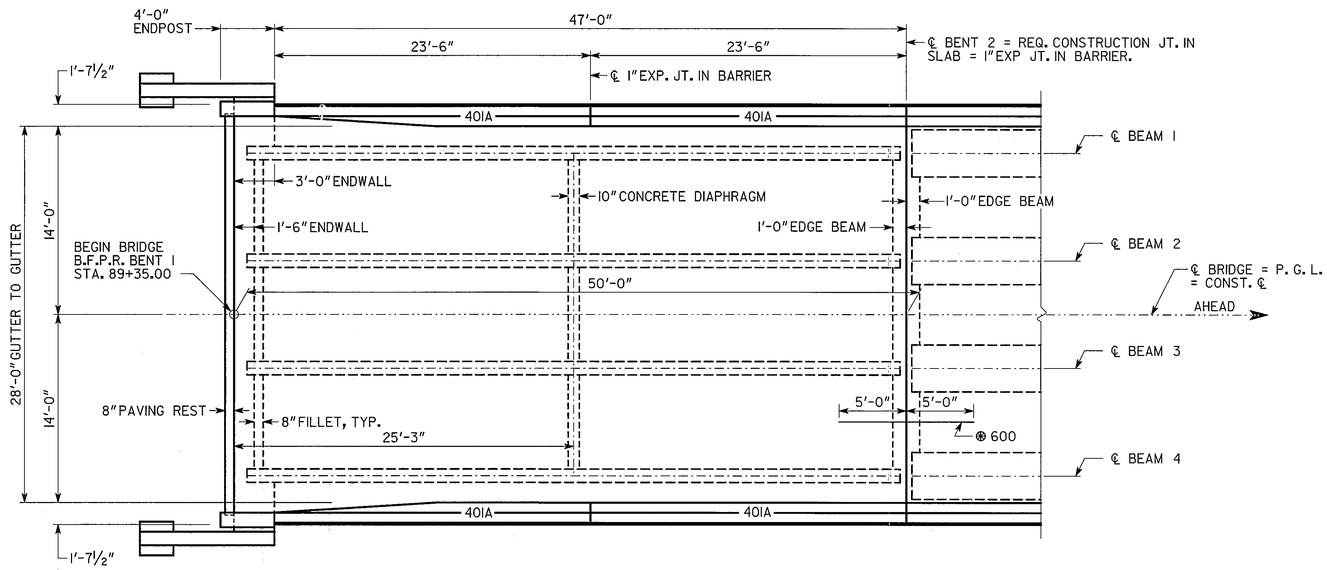

SPAN 1

SPAN 3 SIMILAR

⊛ BARS 600 ARE CONTINUOUS ACROSS JOINT AND ℄ BENT.

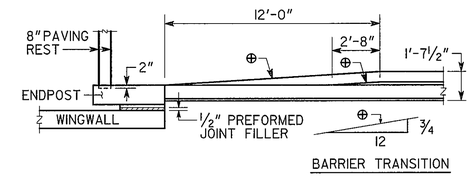

BARRIER TRANSITION DETAIL

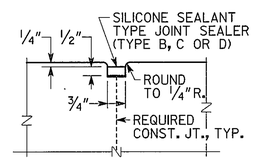

DETAIL "A"

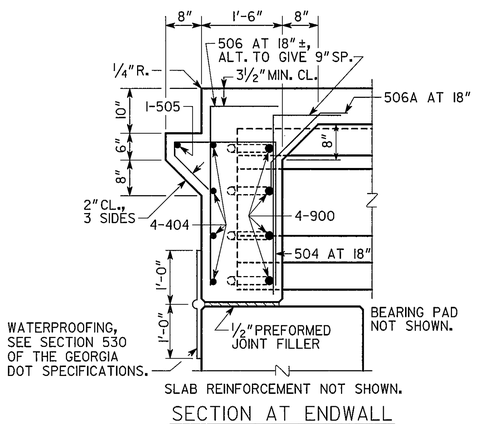

SLAB REINFORCEMENT NOT SHOWN.

SECTION AT ENDWALL

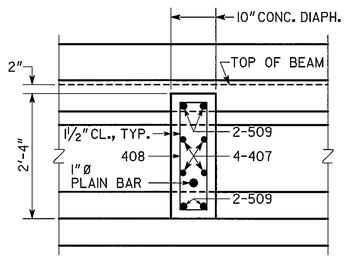

SLAB REINFORCEMENT NOT SHOWN.

SECTION THRU DIAPHRAGM

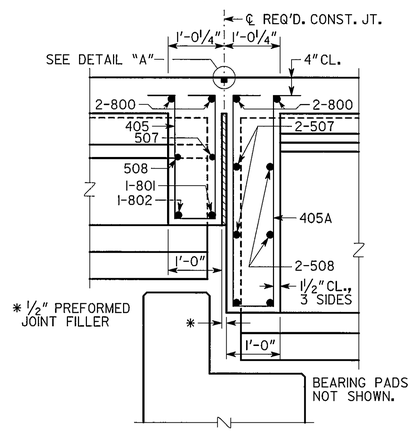

SLAB REINFORCEMENT NOT SHOWN.

SECTION THRU EDGE BEAM

SUPERSTRUCTURE QUANTITIES				
ITEM	SPAN 1	SPAN 2	SPAN 3	TOTAL
LUMP - SUPERSTR. CONCRETE, CU. YDS., CLASS "AA"	48.2	97.8	48.2	194.2
LUMP - SUPERSTR. REINF. STEEL, LBS.	13375	24819	13375	51569

END POST CONCRETE AND BAR REINFORCEMENT STEEL INCLUDED IN END SPAN QUANTITIES

BRIDGE NO. 2

GEORGIA
DEPARTMENT OF TRANSPORTATION
PRECONSTRUCTION DIVISION-OFFICE OF BRIDGE DESIGN

DECK PLAN - END SPANS
C. R. 84 (UNION CHURCH ROAD)
OVER PATAULA CREEK OVERFLOW
QUITMAN CO. BRZLB-0239-00(003)

SCALE: ⅜" = 1'-0" UNLESS NOTED DECEMBER 2009

DRAWING NO. 35-03
BRIDGE SHEET 3 OF 14

REVISIONS | DATE | BY

DESIGNED JLM | CHECKED RAG | REVIEWED WEI/WMD
DRAWN EMM | DESIGN GROUP RAG | APPROVED PVL

35-18 DECKPLANS.DGN