STATE	PROJECT NUMBER	SHEET NO.	TOTAL SHEETS
GA.	BRZLB-0239-00(003)	37	109

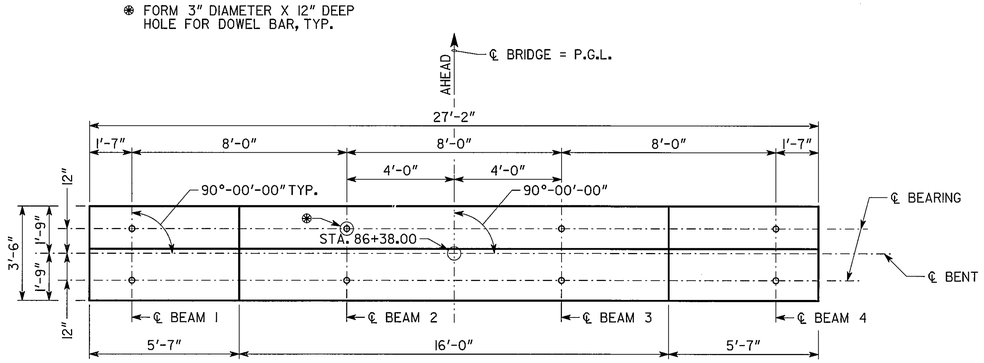

PLAN

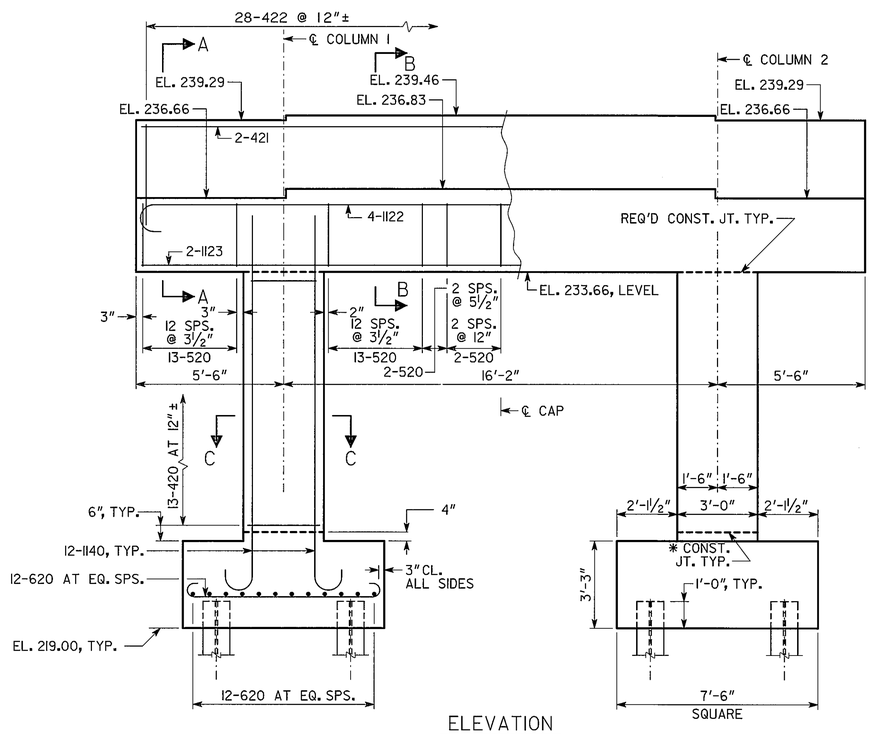

ELEVATION
(LOOKING AHEAD)

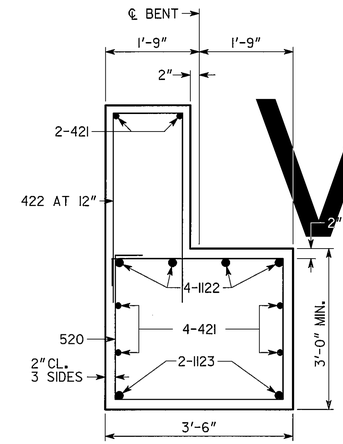

SECTION A-A
NO SCALE

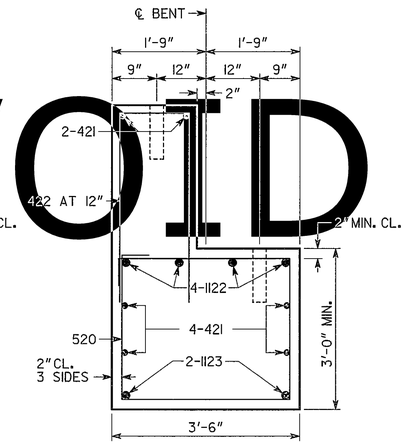

SECTION B-B
NO SCALE

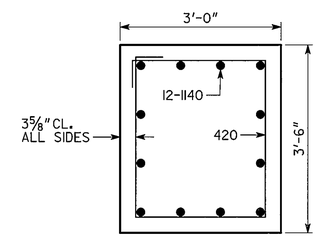

SECTION C-C
NO SCALE

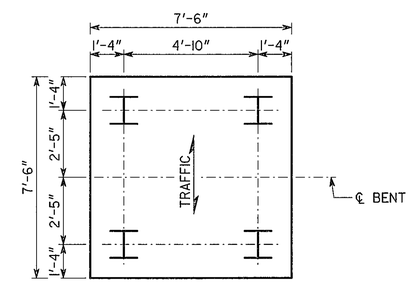

PILE LAYOUT
NO SCALE

NOTES:

1. MAINTAIN 2" CL. ON ALL REINFORCEMENT UNLESS OTHERWISE NOTED.
2. BENT CAP IS SYMMETRICAL ABOUT ℄ CAP.
3. ❋ AT CONTRACTORS OPTION CONSTRUCTION JOINT MAY BE RELOCATED TO TOP OF FOOTING.

SUBSTRUCTURE QUANTITIES	
ITEM	BENT 4
CY CLASS "AA" CONCRETE	37.5
LB BAR REINF STEEL	4950

ALL PILES SHALL BE STEEL H, HP 14 X 73

PLAN DRIVING OBJECTIVE

ALL PILES SHALL BE DRIVEN TO A DRIVING RESISTANCE OF 77 TONS AFTER A MINIMUM TIP ELEVATION OF 195 IS ACHIEVED.

BRIDGE NO. 1

GEORGIA
DEPARTMENT OF TRANSPORTATION
PRECONSTRUCTION DIVISION-OFFICE OF BRIDGE DESIGN

INTERMEDIATE BENT 4
C. R. 84 (UNION CHURCH ROAD)
OVER PATAULA CREEK
QUITMAN CO. BRZLB-0239-00(003)

SCALE: ⅜" = 1'-0" UNLESS NOTED DECEMBER 2009

DESIGNED JLM CHECKED RAG REVIEWED WEI/WMD
DRAWN EMM DESIGN GROUP RAG APPROVED PVL

REVISIONS DATE BY

DRAWING NO. 35-13
BRIDGE SHEET 13 OF 15

35-13 BENT 4.DGN