STATE	PROJECT NUMBER	SHEET NO.	TOTAL SHEETS
GA.	BRZLB-0239-00(003)	30	109

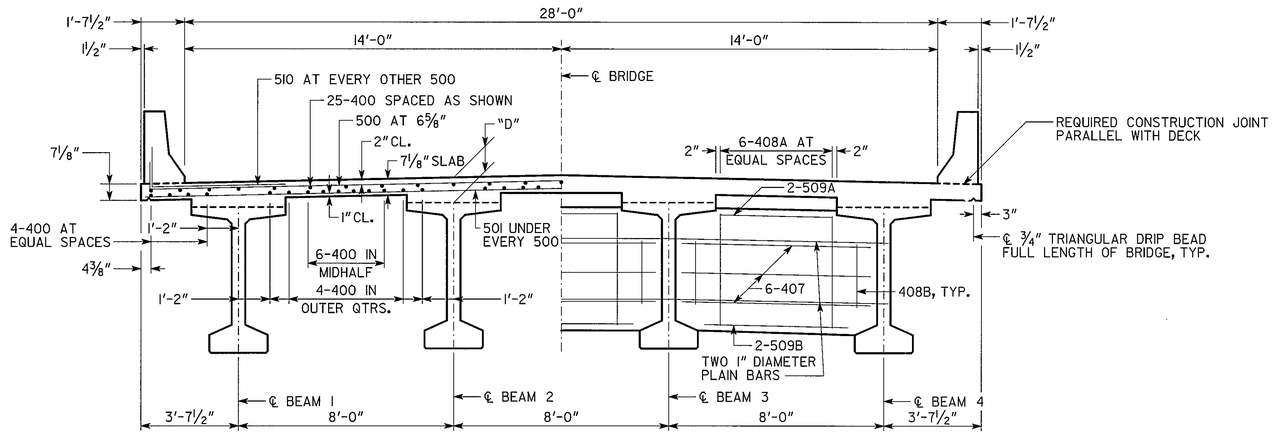

SECTION THRU SLAB
(LOOKING AHEAD)

SECTION THRU DIAPHRAGM
(LOOKING AHEAD)

DIMENSION "D" IS MEASURED FROM TOP OF SLAB TO TOP OF BEAMS AT CENTERLINE BEARING. VARY "D" BETWEEN BEARINGS TO COMPENSATE FOR DEAD LOAD DEFLECTION. MAINTAIN A CONSTANT SLAB THICKNESS OF 7⅛".

"D"= 12 "

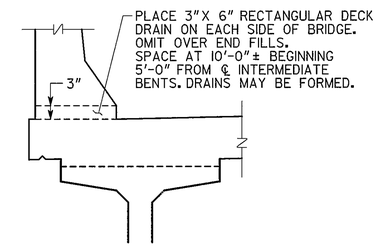

DECK DRAIN DETAIL

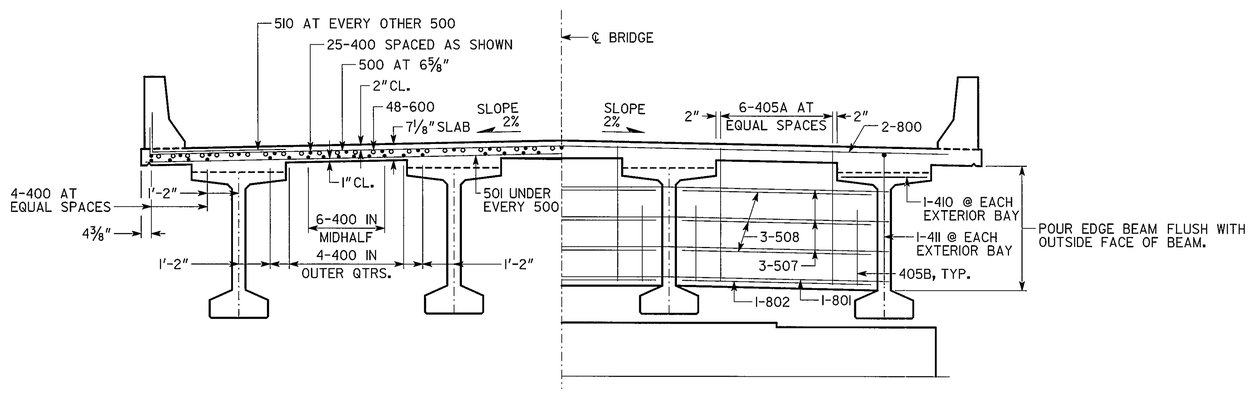

SECTION THRU SLAB AT INTERMEDIATE BENT
(LOOKING AHEAD)

SECTION THRU EDGE BEAM
(LOOKING AHEAD)

BRIDGE NO. 1

GEORGIA
DEPARTMENT OF TRANSPORTATION
PRECONSTRUCTION DIVISION-OFFICE OF BRIDGE DESIGN

DECK SECTIONS - INTERMEDIATE SPANS
C. R. 84 (UNION CHURCH ROAD)
OVER PATAULA CREEK
QUITMAN CO. BRZLB-0239-00(003)

DATE	REVISIONS	BY

DRAWING NO. 35-06	SCALE: ⅜"= 1'-0" UNLESS NOTED	DECEMBER 2009
BRIDGE SHEET 6 OF 15	DESIGNED JLM / DRAWN EMM	CHECKED RAG / DESIGN GROUP RAG / REVIEWED WEI/WMD / APPROVED PVL

35-6 DS QUIT BT65D.DGN